TCRP
REPORT 109

TRANSIT
COOPERATIVE
RESEARCH
PROGRAM

Sponsored by
the Federal
Transit Administration

A Guidebook for Developing and Sharing Transit Bus Maintenance Practices

TRANSPORTATION RESEARCH BOARD
OF THE NATIONAL ACADEMIES

TCRP OVERSIGHT AND PROJECT SELECTION COMMITTEE
(as of September 2005)

CHAIR
DAVID A. LEE
Connecticut Transit

MEMBERS
ANN AUGUST
Santee Wateree Regional Transportation Authority
LINDA J. BOHLINGER
HNTB Corp.
ROBERT I. BROWNSTEIN
PB Consult, Inc.
PETER CANNITO
Metropolitan Transportation Authority—Metro North Railroad
GREGORY COOK
Ann Arbor Transportation Authority
JENNIFER L. DORN
FTA
NATHANIEL P. FORD
Metropolitan Atlanta RTA
RONALD L. FREELAND
Parsons Transportation Group
FRED M. GILLIAM
Capital Metropolitan Transportation Authority
KIM R. GREEN
GFI GENFARE
JILL A. HOUGH
North Dakota State University
JOHN INGLISH
Utah Transit Authority
JEANNE W. KRIEG
Eastern Contra Costa Transit Authority
CELIA G. KUPERSMITH
Golden Gate Bridge, Highway and Transportation District
PAUL J. LARROUSSE
National Transit Institute
CLARENCE W. MARSELLA
Denver Regional Transportation District
FAYE L. M. MOORE
Southeastern Pennsylvania Transportation Authority
MICHAEL H. MULHERN
Jacobs Civil, Inc.
STEPHANIE L. PINSON
Gilbert Tweed Associates, Inc.
ROBERT H. PRINCE, JR.
DMJM+Harris
JEFFREY M. ROSENBERG
Amalgamated Transit Union
MICHAEL SCANLON
San Mateo County Transit District
BEVERLY SCOTT
Sacramento Regional Transit District
KATHRYN D. WATERS
Dallas Area Rapid Transit
FRANK WILSON
Metropolitan Transit Authority of Harris County

EX OFFICIO MEMBERS
WILLIAM W. MILLAR
APTA
ROBERT E. SKINNER, JR.
TRB
JOHN C. HORSLEY
AASHTO
J. RICHARD CAPKA
FHWA

TDC EXECUTIVE DIRECTOR
LOUIS SANDERS
APTA

SECRETARY
ROBERT J. REILLY
TRB

TRANSPORTATION RESEARCH BOARD EXECUTIVE COMMITTEE 2005 (Membership as of October 2005)

OFFICERS

Chair: *John R. Njord, Executive Director, Utah DOT*
Vice Chair: *Michael D. Meyer, Professor, School of Civil and Environmental Engineering, Georgia Institute of Technology*
Executive Director: *Robert E. Skinner, Jr., Transportation Research Board*

MEMBERS

MICHAEL W. BEHRENS, *Executive Director, Texas DOT*
ALLEN D. BIEHLER, *Secretary, Pennsylvania DOT*
LARRY L. BROWN, SR., *Executive Director, Mississippi DOT*
DEBORAH H. BUTLER, *Vice Pres., Customer Service, Norfolk Southern Corporation and Subsidiaries, Atlanta, GA*
ANNE P. CANBY, *President, Surface Transportation Policy Project, Washington, DC*
JOHN L. CRAIG, *Director, Nebraska Department of Roads*
DOUGLAS G. DUNCAN, *President and CEO, FedEx Freight, Memphis, TN*
NICHOLAS J. GARBER, *Professor of Civil Engineering, University of Virginia, Charlottesville*
ANGELA GITTENS, *Vice President, Airport Business Services, HNTB Corporation, Miami, FL*
GENEVIEVE GIULIANO, *Director, Metrans Transportation Center, and Professor, School of Policy, Planning, and Development, USC, Los Angeles*
BERNARD S. GROSECLOSE, JR., *President and CEO, South Carolina State Ports Authority*
SUSAN HANSON, *Landry University Prof. of Geography, Graduate School of Geography, Clark University*
JAMES R. HERTWIG, *President, CSX Intermodal, Jacksonville, FL*
GLORIA JEAN JEFF, *Director, Michigan DOT*
ADIB K. KANAFANI, *Cahill Professor of Civil Engineering, University of California, Berkeley*
HERBERT S. LEVINSON, *Principal, Herbert S. Levinson Transportation Consultant, New Haven, CT*
SUE MCNEIL, *Professor, Department of Civil and Environmental Engineering, University of Delaware, Newark*
MICHAEL R. MORRIS, *Director of Transportation, North Central Texas Council of Governments*
CAROL A. MURRAY, *Commissioner, New Hampshire DOT*
MICHAEL S. TOWNES, *President and CEO, Hampton Roads Transit, Hampton, VA*
C. MICHAEL WALTON, *Ernest H. Cockrell Centennial Chair in Engineering, University of Texas, Austin*
LINDA S. WATSON, *Executive Director, LYNX—Central Florida Regional Transportation Authority*

EX OFFICIO MEMBERS

MARION C. BLAKEY, *Federal Aviation Administrator, U.S.DOT*
JOSEPH H. BOARDMAN, *Federal Railroad Administrator, U.S.DOT*
REBECCA M. BREWSTER, *President and COO, American Transportation Research Institute, Smyrna, GA*
GEORGE BUGLIARELLO, *Chancellor, Polytechnic University, and Foreign Secretary, National Academy of Engineering*
J. RICHARD CAPKA, *Acting Administrator, Federal Highway Administration, U.S.DOT*
THOMAS H. COLLINS (Adm., U.S. Coast Guard), *Commandant, U.S. Coast Guard*
JENNIFER L. DORN, *Federal Transit Administrator, U.S.DOT*
JAMES J. EBERHARDT, *Chief Scientist, Office of FreedomCAR and Vehicle Technologies, U.S. Department of Energy*
JACQUELINE GLASSMAN, *Deputy Administrator, National Highway Traffic Safety Administration, U.S.DOT*
EDWARD R. HAMBERGER, *President and CEO, Association of American Railroads*
JOHN C. HORSLEY, *Exec. Dir., American Association of State Highway and Transportation Officials*
JOHN E. JAMIAN, *Acting Administrator, Maritime Administration, U.S. DOT*
EDWARD JOHNSON, *Director, Applied Science Directorate, National Aeronautics and Space Administration*
ASHOK G. KAVEESHWAR, *Research and Innovative Technology Administrator, U.S.DOT*
BRIGHAM MCCOWN, *Deputy Administrator, Pipeline and Hazardous Materials Safety Administration, U.S.DOT*
WILLIAM W. MILLAR, *President, American Public Transportation Association*
SUZANNE RUDZINSKI, *Director, Transportation and Regional Programs, U.S. EPA*
ANNETTE M. SANDBERG, *Federal Motor Carrier Safety Administrator, U.S.DOT*
JEFFREY N. SHANE, *Under Secretary for Policy, U.S.DOT*
CARL A. STROCK (Maj. Gen., U.S. Army), *Chief of Engineers and Commanding General, U.S. Army Corps of Engineers*

TRANSIT COOPERATIVE RESEARCH PROGRAM

Transportation Research Board Executive Committee Subcommittee for TCRP

JOHN R. NJORD, *Utah DOT* (Chair)
JENNIFER L. DORN, *Federal Transit Administration, U.S.DOT*
MICHAEL D. MEYER, *Georgia Institute of Technology*
WILLIAM W. MILLAR, *American Public Transportation Association*
ROBERT E. SKINNER, JR., *Transportation Research Board*
MICHAEL S. TOWNES, *Hampton Roads Transit, Hampton, VA*
C. MICHAEL WALTON, *University of Texas, Austin*
LINDA S. WATSON, *LYNX—Central Florida Regional Transportation Authority*

TRANSIT COOPERATIVE RESEARCH PROGRAM

TCRP REPORT 109

A Guidebook for Developing and Sharing Transit Bus Maintenance Practices

JOHN SCHIAVONE
Transit Resource Center
Guilford, CT

SUBJECT AREAS
Public Transit

Research Sponsored by the Federal Transit Administration in Cooperation with the Transit Development Corporation

TRANSPORTATION RESEARCH BOARD

WASHINGTON, D.C.
2005
www.TRB.org

TRANSIT COOPERATIVE RESEARCH PROGRAM

The nation's growth and the need to meet mobility, environmental, and energy objectives place demands on public transit systems. Current systems, some of which are old and in need of upgrading, must expand service area, increase service frequency, and improve efficiency to serve these demands. Research is necessary to solve operating problems, to adapt appropriate new technologies from other industries, and to introduce innovations into the transit industry. The Transit Cooperative Research Program (TCRP) serves as one of the principal means by which the transit industry can develop innovative near-term solutions to meet demands placed on it.

The need for TCRP was originally identified in *TRB Special Report 213—Research for Public Transit: New Directions,* published in 1987 and based on a study sponsored by the Urban Mass Transportation Administration—now the Federal Transit Administration (FTA). A report by the American Public Transportation Association (APTA), *Transportation 2000*, also recognized the need for local, problem-solving research. TCRP, modeled after the longstanding and successful National Cooperative Highway Research Program, undertakes research and other technical activities in response to the needs of transit service providers. The scope of TCRP includes a variety of transit research fields including planning, service configuration, equipment, facilities, operations, human resources, maintenance, policy, and administrative practices.

TCRP was established under FTA sponsorship in July 1992. Proposed by the U.S. Department of Transportation, TCRP was authorized as part of the Intermodal Surface Transportation Efficiency Act of 1991 (ISTEA). On May 13, 1992, a memorandum agreement outlining TCRP operating procedures was executed by the three cooperating organizations: FTA, The National Academies, acting through the Transportation Research Board (TRB); and the Transit Development Corporation, Inc. (TDC), a nonprofit educational and research organization established by APTA. TDC is responsible for forming the independent governing board, designated as the TCRP Oversight and Project Selection (TOPS) Committee.

Research problem statements for TCRP are solicited periodically but may be submitted to TRB by anyone at any time. It is the responsibility of the TOPS Committee to formulate the research program by identifying the highest priority projects. As part of the evaluation, the TOPS Committee defines funding levels and expected products.

Once selected, each project is assigned to an expert panel, appointed by the Transportation Research Board. The panels prepare project statements (requests for proposals), select contractors, and provide technical guidance and counsel throughout the life of the project. The process for developing research problem statements and selecting research agencies has been used by TRB in managing cooperative research programs since 1962. As in other TRB activities, TCRP project panels serve voluntarily without compensation.

Because research cannot have the desired impact if products fail to reach the intended audience, special emphasis is placed on disseminating TCRP results to the intended end users of the research: transit agencies, service providers, and suppliers. TRB provides a series of research reports, syntheses of transit practice, and other supporting material developed by TCRP research. APTA will arrange for workshops, training aids, field visits, and other activities to ensure that results are implemented by urban and rural transit industry practitioners.

The TCRP provides a forum where transit agencies can cooperatively address common operational problems. The TCRP results support and complement other ongoing transit research and training programs.

TCRP REPORT 109

Project E-5
ISSN 1073-4872
ISBN 0-309-08842-9
Library of Congress Control Number 2005934507

© 2005 Transportation Research Board

Price $24.00

NOTICE

The project that is the subject of this report was a part of the Transit Cooperative Research Program conducted by the Transportation Research Board with the approval of the Governing Board of the National Research Council. Such approval reflects the Governing Board's judgment that the project concerned is appropriate with respect to both the purposes and resources of the National Research Council.

The members of the technical advisory panel selected to monitor this project and to review this report were chosen for recognized scholarly competence and with due consideration for the balance of disciplines appropriate to the project. The opinions and conclusions expressed or implied are those of the research agency that performed the research, and while they have been accepted as appropriate by the technical panel, they are not necessarily those of the Transportation Research Board, the National Research Council, the Transit Development Corporation, or the Federal Transit Administration of the U.S. Department of Transportation.

Each report is reviewed and accepted for publication by the technical panel according to procedures established and monitored by the Transportation Research Board Executive Committee and the Governing Board of the National Research Council.

Special Notice

The Transportation Research Board of The National Academies, the National Research Council, the Transit Development Corporation, and the Federal Transit Administration (sponsor of the Transit Cooperative Research Program) do not endorse products or manufacturers. Trade or manufacturers' names appear herein solely because they are considered essential to the clarity and completeness of the project reporting.

Published reports of the

TRANSIT COOPERATIVE RESEARCH PROGRAM

are available from:

Transportation Research Board
Business Office
500 Fifth Street, NW
Washington, DC 20001

and can be ordered through the Internet at
http://www.national-academies.org/trb/bookstore

Printed in the United States of America

THE NATIONAL ACADEMIES

Advisers to the Nation on Science, Engineering, and Medicine

The **National Academy of Sciences** is a private, nonprofit, self-perpetuating society of distinguished scholars engaged in scientific and engineering research, dedicated to the furtherance of science and technology and to their use for the general welfare. On the authority of the charter granted to it by the Congress in 1863, the Academy has a mandate that requires it to advise the federal government on scientific and technical matters. Dr. Ralph J. Cicerone is president of the National Academy of Sciences.

The **National Academy of Engineering** was established in 1964, under the charter of the National Academy of Sciences, as a parallel organization of outstanding engineers. It is autonomous in its administration and in the selection of its members, sharing with the National Academy of Sciences the responsibility for advising the federal government. The National Academy of Engineering also sponsors engineering programs aimed at meeting national needs, encourages education and research, and recognizes the superior achievements of engineers. Dr. William A. Wulf is president of the National Academy of Engineering.

The **Institute of Medicine** was established in 1970 by the National Academy of Sciences to secure the services of eminent members of appropriate professions in the examination of policy matters pertaining to the health of the public. The Institute acts under the responsibility given to the National Academy of Sciences by its congressional charter to be an adviser to the federal government and, on its own initiative, to identify issues of medical care, research, and education. Dr. Harvey V. Fineberg is president of the Institute of Medicine.

The **National Research Council** was organized by the National Academy of Sciences in 1916 to associate the broad community of science and technology with the Academy's purposes of furthering knowledge and advising the federal government. Functioning in accordance with general policies determined by the Academy, the Council has become the principal operating agency of both the National Academy of Sciences and the National Academy of Engineering in providing services to the government, the public, and the scientific and engineering communities. The Council is administered jointly by both the Academies and the Institute of Medicine. Dr. Ralph J. Cicerone and Dr. William A. Wulf are chair and vice chair, respectively, of the National Research Council.

The **Transportation Research Board** is a division of the National Research Council, which serves the National Academy of Sciences and the National Academy of Engineering. The Board's mission is to promote innovation and progress in transportation through research. In an objective and interdisciplinary setting, the Board facilitates the sharing of information on transportation practice and policy by researchers and practitioners; stimulates research and offers research management services that promote technical excellence; provides expert advice on transportation policy and programs; and disseminates research results broadly and encourages their implementation. The Board's varied activities annually engage more than 5,000 engineers, scientists, and other transportation researchers and practitioners from the public and private sectors and academia, all of whom contribute their expertise in the public interest. The program is supported by state transportation departments, federal agencies including the component administrations of the U.S. Department of Transportation, and other organizations and individuals interested in the development of transportation. **www.TRB.org**

www.national-academies.org

COOPERATIVE RESEARCH PROGRAMS STAFF FOR TCRP REPORT 109

ROBERT J. REILLY, *Director, Cooperative Research Programs*
CHRISTOPHER W. JENKS, *TCRP Manager*
EILEEN P. DELANEY, *Director of Publications*
HILARY FREER, *Senior Editor*
BETH HATCH, *Editor*

PROJECT PANEL E-5
Field of Maintenance

MICHAEL WEHR, *Milwaukee County Transit System, Milwaukee, WI* (Chair)
FRED M. GILLIAM, *Capital Metropolitan Transportation Authority, Austin, TX*
LARRY KUCERA, *ATC Phoenix Transit, Phoenix, AZ*
THOMAS MAZE, *Iowa State University, Ames, IA*
ELISA M. NICHOLS, *Kensington Consulting LLC, Kensington, MD*
DARRYL SPENCER, *Dallas Area Rapid Transit*
STEPHEN M. STARK, *MTA New York City Transit*
FRANK W. VENEZIA, *Lea + Elliott, Inc., Naperville, IL*
GENE WALKER, *Golden Gate Bridge, Highway, and Transportation District, San Rafael, CA*
MICHAEL O'CONNOR, *FTA Liaison*
FRANK N. LISLE, *TRB Liaison*

FOREWORD

By Christopher W. Jenks
TCRP Manager
Transportation Research Board

This report should be of interest to transit bus maintenance managers and others interested in the development of written transit bus maintenance procedures, or "practices," and the sharing of these practices with others in the transit industry. The report provides guidance on how to develop effective transit bus maintenance practices tailored to one's local operating environment. It provides seven sample practices developed using the guidance. Complementing this report is an on-line Web Board sponsored by the Transportation Research Board's Committee on Transit Fleet Maintenance. This Web Board allows transit agencies to post their maintenance practices for others to review, revise as necessary for their own operating conditions, and use. The report provides instructions on how to access the Web Board, use it to develop maintenance practices, and share these practices among transit agencies.

People involved in maintenance of transit buses must frequently address issues for which no internal written maintenance practices are available. Consequently, information must be gathered to assist in determining how best to address the issues. Whether the issue is an equipment problem, an inspection procedure, a campaign replacement, a climatological adaptation, or a routine cleaning, information usually is gathered from other transit systems and vendors, and a maintenance practice is developed to meet the needs of the local system. That practice then becomes the de facto norm for the system until a better way to address the issue is identified.

Unfortunately, the results of such efforts are not typically shared with the rest of the transit industry. Consequently, many transit systems, facing the same need to provide detailed work procedures, expend valuable time and resources duplicating the research of other transit systems. Consequently, research was needed to provide guidance to transit systems on a methodology for developing bus maintenance practices and sharing them with the rest of the transit industry. The intent of this research was not to develop universal best maintenance practices, but, rather, to assist maintenance managers in obtaining and validating relevant information, filling in the gaps where necessary, developing a practice most applicable to local conditions, and appropriately sharing maintenance practices with the rest of the transit industry.

Under TCRP Project E-5, the Transit Resource Center, in collaboration with John Schiavone, Consultant, was asked to develop a guidebook that provides a methodology to assist maintenance managers in developing and sharing bus maintenance practices. To complete the project objective, the research team conducted a review of research in the area of developing and sharing maintenance practices in transit and other related industries, such as trucking, airlines, and defense. A survey of APTA and CTAA members was also conducted to obtain information on methods that members currently used to develop and share maintenance practices, members' willingness to share maintenance practices with others in the industry, members' ideas on the guidebook content,

and members' suggestions on maintenance problem areas that would serve as useful case studies in the guidebook. The research team then identified and evaluated currently available tools and information sources that can assist in developing and sharing transit bus maintenance practices and identified the strengths and weaknesses of each tool and information source. Currently available tools and information sources included transit maintenance Web Boards, transit system best practices and process sheets, and vendor-supplied information.

Based on the information collected, the research team developed this guidebook. The guidebook contains detailed instructions on how a maintenance manager can develop a maintenance practice based on the local operating environment and provides seven case studies of specific maintenance practices developed using the guidebook process. Concurrent with the development of the guidebook, the research team enhanced an on-line Web Board sponsored by the Transportation Research Board's Committee on Transit Fleet Maintenance. This Web Board allows transit agencies to post their maintenance practices for others to review, revise as necessary for their own operating conditions, and use. The report provides instructions on how to access the Web Board and use it to develop maintenance practices and to share information on transit bus maintenance practices among transit agencies.

CONTENTS

1 SUMMARY

3 CHAPTER 1 Introduction
- Overview, 3
- Background and Purpose, 3
- Guidebook Structure and Contents, 3
- Using this Guidebook, 4
- Benefits, 4
  - Other Transportation Industries, 4
  - APTA's Bus Standards Activities, 4
  - Specific Benefits to Bus Transit, 5
- Determining the Need for Practices, 5

7 CHAPTER 2 Reference Materials and Web Board Use
- Overview, 7
- Part 1: Legal Considerations, 7
  - Overview, 7
  - Intellectual Property, 7
  - Consequences of Not Protecting Intellectual Property, 9
  - Examples and Clauses, 9
  - Web Board Disclaimer, 9
- Part 2: Reference Material, 9
  - Overview, 9
  - Using the Web Board, 9
  - Obtaining Reference Material, 10
- Part 3: Prioritizing Reference Material, 15
- Part 4: Tailoring Practices to Local Conditions, 16
  - Background, 16
  - Weather-Related Conditions, 16
- Part 5: Developing Time Standards, 17
  - Uniform Procedures, 18
  - Establishing Standard Repair Times, 18
  - Monitoring Time, 18
  - Setting Policy, 19
  - Employee and Union Involvement, 19
  - Other Sources, 19
- Part 6: Integrating Practices with Training, 19
- Part 7: Regulatory Compliance, 19
  - Overview, 19
- FTA Programs and Requirements, 20
  - Triennial Review, 20
  - Model Transit Bus Safety and Security Program, 20
- Federal Requirements, 20
- The United States Department of Transportation (USDOT), 20
  - Code of Federal Regulations (CFR), 20
  - Federal Motor Vehicle Safety Standards (FMVSS), 21
- Environmental Protection Agency (EPA), 21
  - Vehicles, 21
  - Facilities, 21
  - Certifications and Licenses, 23
- Americans with Disabilities Act (ADA), 23
  - Buses, 23
  - Facilities, 23
- Occupational Safety and Health Administration (OSHA), 23
  - Overview, 23
  - Facility Safety, 24
  - Personal Safety, 24
- State and Local Requirements, 25
- OSHA and the EPA, 25
  - Department of Transportation, 25
  - Local Health and Environmental Agencies, 25
  - Uniform Building Codes, 25
- Compliance Checklist, 26
- Compliance Monitoring, 26

Contact List, 26
USDOT, 26
FMVSS, 26
EPA, 27
OSHA, 27
FTA (Also See USDOT), 27
CDC, 27

28 CHAPTER 3 Improving Writing Skills and Using Graphics
Overview, 28
Writing Effectively, 28
The Five "Cs" for Good Writing, 28
Tips for Improving Existing Text, 28
Writing Resources, 29
Using Photographs and Graphics, 30
Overview, 30
Acquiring Electronic Picture Files, 30
Storing Files, 30
Inserting Pictures into a Word File, 30
Moving Pictures Around on the Page, 32
Enlarging or Reducing Picture Dimensions, 32
Cropping Pictures, 32
Deleting Pictures, 32
Adding Arrows, Circles, and Labels, 32
Reducing the Size of Word Files, 33
Reducing Photo File Size for Web Board Posting, 33
Troubleshooting, 33

35 CHAPTER 4 Developing and Validating Practices
Overview, 35
Developing Practices, 35
MS Word Template, 35
Effort Required, 35
Who Develops the Practice? 35
Step-by-Step Practice Instructions, 36
Validating and Updating Practices, 40
Validating, 40
Updating, 41

42 CHAPTER 5 Uniform Title Format for Sharing Practices
Overview, 42
Practice Title Format, 42
Topic Heading, 42
Task Description (If Applicable), 43
Component Application (If Applicable), 43
Bus Application (If Applicable), 43
Posting Practices on the Web Board, 43

44 CHAPTER 6 Sample Maintenance Practices
Sample Maintenance Practice #1: Bus PMI; 1990 GMC/RTS/NOVA, 40-Ft High Floor, 46
Sample Maintenance Practice #2: Bus PMI; 2003 STARTRANS Senator, 20-Ft.; Ford E-350 Chassis, 56
Sample Maintenance Practice #3: Component PMI; Thermo King Model T11-M85 AC with IntelligAIRE II; 2004; Gillig; 30-Foot Low Floor, 61
Sample Maintenance Practice #4: Electrical; Repair; All Buses, 74
Sample Maintenance Practice #5: Brakes; Remove and Replace Front Brakes; 2003 STARTRANS Senator, 20-Ft.; Ford E-350 Chassis, 83
Sample Maintenance Practice #6: Body; Door Adjustment; Vapor/NFIL Slide Glide Door; 2002 New Flyer 40LF, 88
Sample Maintenance Practice #7: Service; Service Line Functions, 94

102 ABBREVIATIONS AND ACRONYMS

A-1 APPENDIX A Legal Considerations

B-1 APPENDIX B MS Word Template Instructions

C-1 APPENDIX C MS Word Template

A GUIDEBOOK FOR DEVELOPING AND SHARING TRANSIT BUS MAINTENANCE PRACTICES

SUMMARY

Maintenance procedures that are documented into a set of formal work instructions, referred to here as "practices," offer transit agencies many benefits. Practices help ensure that workers with different backgrounds all perform their duties in a consistent and thorough manner because the instructions contained in the practices incorporate the collective experiences and insights held by the agency, by the original equipment manufacturers, and by the industry at large. Practices also help ensure compliance with federal and local regulations and provide essential instructions for promoting safety, disposing of hazardous materials, using special tools, and including standard repair times if desired.

The complexities involved with government regulations, occupational safety, and bus technology are far too great for transit managers to simply assume that all workers fully understand them and will perform their jobs in a proper manner. What may be considered "proper" for some workers could easily turn out to be in direct violation of a critical regulation or a manufacturer's requirement needed to maintain warranty coverage. Practices leave little room for interpretation because they document the steps that an agency expects its maintenance workers to follow, providing explicit instructions that can be referred to and updated over time. Some agencies incorporate these instructions directly into their classroom training curriculum. For those who monitor worker performance and establish productivity and quality requirements, practices become the standard against which individual performance is uniformly and fairly measured.

While virtually every agency uses a basic checklist to conduct preventive maintenance inspections, many, especially smaller agencies, simply do not have the time or staff to develop instructions for other essential maintenance and repair activities. Fortunately, the transit community has a great deal of collective knowledge concerning practices, and the community can freely exchange this knowledge without the competitive pressures typically found in other industries. Regardless of how extensive or unencumbered the knowledge is, however, that knowledge is of little value if agencies cannot get to it. Those without access are forced to find solutions and establish procedures in virtual isolation, even though much of the equipment and tasks are similar throughout the transit bus industry.

Aware of this dilemma, the Transit Cooperative Research Program (TCRP) produced this "Guidebook for Developing and Sharing Bus Maintenance Practices" to give agencies equal access to the collective knowledge that exists in transit. Topics covered in the Guidebook include legal considerations; obtaining, applying, and prioritizing reference material; tips on writing well and using photographs to enhance practices; tailoring practices to unique local conditions; formatting practices; and updating and validating completed practices. Also included are seven sample practices developed from applying the Guidebook to popular maintenance jobs performed on a variety of buses operated by large and small agencies alike. The examples can be used by agencies as a starting point to prepare their own practices on similar topics.

Another key element of the Guidebook is its Web Board component, an Internet site sponsored by TRB and made available free of charge to the transit community. The Web Board contains an electronic copy of the Guidebook and features a library of existing agency practices cataloged under major heading groups so agencies can share their practices with others. Agencies can also use the Web Board to locate reference material from a variety of other sources, including original equipment manufacturers, TRB, the American Public Transportation Association (APTA), the Community Transportation Association of America, the Society of Automotive Engineers, and others. Agencies can add their practices to the Web Board at any time by following a basic titling sequence.

The Guidebook offers guidance. It does not attempt to make one universal approach or format applicable to all. Instead, it includes the tools needed to tailor practices to an agency's own needs and local conditions, recommends a format for structuring the practices to ensure that all essential elements are included, and provides a platform for sharing the practices with others. The Guidebook is also structured to give agencies maximum flexibility in applying the guidance. For example, users could read all of the background material in advance before writing the practice or begin writing the practice and refer back to specific sections as needed. A Microsoft Word® template has also been created to facilitate the practice-writing process. Another option is to download an existing practice cataloged on the Web Board and modify it to suit the agency's own particular operation. The Guidebook allows those without computer skills or Internet access to obtain essential reference material and to write the practice using more traditional methods.

CHAPTER 1

INTRODUCTION

This Guidebook is designed to give users a great deal of flexibility in applying the material contained in it to develop maintenance practices. Because of this flexibility, it is highly recommended that you become familiar with the table of contents and pay particular attention to the sections below on "Guidebook Structure and Contents" and "Using this Guidebook." The sections summarize the various approaches that can be taken to apply the Guidebook.

OVERVIEW

Simply stated, maintenance practices are written instructions for carrying out specific job tasks such as preventive maintenance inspections (PMIs) and other bus- and facility-related repairs. Agencies use a variety of terms to describe these instructions, such as process sheets, recommended practices (RPs), standard operating procedures (SOPs), work standards, and others. This Guidebook, however, will refer to these instructions as "practices."

Practices provide maintenance personnel with a clear indication of what the agency is looking for in terms of a finished work product. Without these instructions, workers can approach jobs in a manner that may not be efficient, comprehensive, safe, or in keeping with the agency's expectations for overall work quality. Understanding that agencies have dissimilar resources and needs, this Guidebook is designed to offer flexibility in selecting an approach that works best for each maintenance operation.

The Guidebook is intended to assist agencies of all sizes, including those operating smaller buses in rural areas. In conducting research for this project, input was solicited from a variety of groups, including the Bus Equipment and Maintenance Committee (BEMC) of APTA, the TRB Committee on Transit Fleet Maintenance, as well as maintenance representatives from the Community Transportation Association of America (CTAA), which represents the interests of small and rural agencies. Several of the sample maintenance practices included in Chapter 6 pertain to the smaller buses typically operated by CTAA member agencies.

BACKGROUND AND PURPOSE

Agencies are finding it increasingly difficult to send maintenance personnel to meetings where they can make contacts and exchange information on a variety of technical subjects. This lack of communication opportunity comes at a time when bus technology is becoming increasingly complex, workers are required to do more with less, and employee turnover is more prevalent. Budget cuts have also forced some agencies to abandon apprenticeship programs that pass down valuable knowledge from senior mechanics to new hires.

Fortunately, there exists a great deal of collective knowledge within the transit community. This Guidebook project taps into that knowledge to:

1. Get agencies to understand the benefits and importance of using maintenance practices;
2. Provide agencies with the guidance needed to write practices based on their own needs, abilities, climate, and shop conditions;
3. Make the guidance easy to understand and apply; and
4. Build a library of practices that agencies can share with their peers.

GUIDEBOOK STRUCTURE AND CONTENTS

The first three Guidebook chapters contain essential information needed before setting out to develop an actual practice. They include instructions on collecting, evaluating, and synthesizing reference material from a variety of sources; tailoring practices to your own local conditions; integrating practices with training; addressing regulatory compliance issues; improving writing skills; and inserting photographs. Preparing yourself with this material in advance will make the finished practice more useful and effective.

Chapter 4 is the heart of the Guidebook because it offers a format and step-by-step instructions for writing practices and ends with suggestions for validating and updating practices. Chapter 5 describes how to give your practices a uniform title when sharing them with others over the Internet. Although manual distribution methods were explored for sharing practices, the resources required were far too great. The solution chosen was an Internet-based Web Board established as a companion to this Guidebook. In addition to housing a

collection of agency practices cataloged under major headings, the Web Board makes it easier to locate needed reference materials. Additional information on the Web Board is provided below and in Chapter 2.

The Guidebook concludes with Chapter 6, a series of seven sample practices developed from applying the guidance offered here to popular maintenance tasks. The sample practices illustrate what a completed practice could look like in terms of structure and content. Like existing agency practices found on the Web Board, the sample Guidebook practices could serve as a useful starting point for developing your own practices on similar topics.

USING THIS GUIDEBOOK

Use of this Guidebook is *completely voluntary* and can be applied in whole or in part. There is no one approach that is "right" for all agencies to use. Unlike standards and RPs developed through a consensus-driven process requiring universal approval, material in this Guidebook can be used to develop practices tailored specifically to your own maintenance operation. Agencies that already have practices can use the guidance to improve them, while those without practices now have a framework to get the process going.

The Guidebook and its Web Board component, which may appear overwhelming at first, are actually designed to give agencies a variety of choices as they set off to develop or improve their practices. The Guidebook also accommodates those with or without computer skills and Internet access. The hard-copy version includes all of the essential material needed to develop practices without using a computer. Those with computer skills, however, can access additional Guidebook features and the Internet-based Web Board to make the job easier.

You have several choices in applying the Guidebook. The recommended approach is to read all of the background material contained in Chapters 1–3 in preparation for writing the practice as described in Chapter 4. A second approach is to go directly to Chapter 4 and begin writing the practice, referring back to the previous three chapters as needed for specific information.

A third and "fast-track" approach, although not necessarily the best, is to use one of the sample practices included in Chapter 6 or one of the existing agency practices cataloged under major bus maintenance headings on the Web Board as a starting point to develop your own practices. You can also upload your agency's practices to this collection at any time.

If you decide to skip around and use only select parts of the Guidebook, it is strongly recommended that you first become familiar with the table of contents because it provides a useful roadmap of all the material covered. In addition, it is strongly recommended that you read the section on legal considerations found at the beginning of Chapter 2 and in Appendix A before you write any maintenance practice.

You also have a choice when it comes to physically writing the practice. If you prefer the "manual" approach and are uncomfortable with computers, you can use the format contained in Chapter 4 to write practices using more traditional means (e.g., typewriter and pen and paper). For those with a computer and Internet access, the Guidebook is available in electronic format. It includes an MS Word® template so you can compose your practices directly on a personal computer. You could also use your own word processing program to write practices without the template.

The template not only standardizes the document style (e.g., font, margins, and page layout), but also provides links to specific instructions and reference sections contained in the Guidebook (e.g., instructions for inserting photos and tips on writing well). Without the template, you would use the table of contents to reference the appropriate pages of the hard-copy version. An electronic version of the Guidebook and the Word template are available as a download on the Web Board described in Chapter 2, Part 2.

The various approaches to writing practices are intended to accommodate the various skills and resources available to agencies. It is hoped that the added flexibility will encourage more agencies to develop practices and enjoy the many benefits offered by them.

BENEFITS

Other Transportation Industries

The benefits of having—and using—documented maintenance practices *cannot be overemphasized.* In the airline industry, where steps to ensure passenger safety are unmatched, airlines, aircraft makers, and the federal government all cooperate to make certain that documented practices guide every essential maintenance task. The trucking industry publishes hundreds of RPs for their members. United Parcel Service (UPS), for example, develops practices that are so detailed that another mechanic can take over a major job at any time knowing exactly where the previous mechanic left off.

Private and public railroads also produce standards and RPs. As one example, APTA is leading a standards-development effort that includes the development of maintenance practices for both rail and bus transit. All of these organizations understand the benefits derived from using practices to guide and standardize routine maintenance tasks.

APTA's Bus Standards Activities

On the bus side, APTA is involved with two standards activities. One is a program for developing voluntary RPs. Unlike the agency-specific practices developed from this Guidebook, APTA's RPs are being developed by consensus for use by the transit industry as a whole. As a result, material contained in them tends to be generic because of their universal appeal. However, agencies can use material contained in the APTA

RPs as is or can use this Guidebook to make the RPs reflect specific agency procedures and conditions.

The other APTA program involves a collection of RPs developed by the American Trucking Association (ATA) for the heavy-duty trucking industry. Since many truck components are similar to those used in transit buses, several of the ATA's existing practices also apply to transit buses in whole or in part. The collection of these ATA trucking RPs, entitled "Recommended Maintenance Practice for Transit Buses," is an essential reference document available through APTA. Chapter 2 contains information on how to obtain the bus RPs being developed by APTA and the truck RPs assembled by the ATA.

Specific Benefits to Bus Transit

Many transit agencies already understand the benefits of using practices. In a survey of 62 agencies conducted as part of this project, over 56 percent reported that they use maintenance practices. Among agencies with such practices, the average number of practices was 34. Agencies without practices may recognize the value of practices, but simply lack the resources or time needed to prepare them.

Practices benefit both workers and management. The primary benefit to workers is that practices provide a clear set of instructions on how to accomplish specific maintenance tasks that can be referred to over time. The instructions impart the agency's collective wisdom based on its own experiences and the knowledge gained from others. As new information becomes available, practices can be updated to reflect the most complete, most efficient, and safest manner in which to get the job done.

For new hires and seasoned workers alike, practices serve as a convenient refresher to ensure that all job procedures have been correctly followed. Practices can also provide workers with other essential information, such as safety procedures, replacement parts and tools needed for the job, a glossary of terms to promote universal understanding, and proper disposal and handling of any hazardous materials generated from the job.

The primary benefit to management is that practices help ensure consistency between jobs regardless of who performs the work. Practices can also include a standard repair time (SRT), allowing management to monitor worker performance, schedule work, determine staffing levels, and estimate job costs. The costing information could be used for budgeting purposes and to determine if outsourcing certain jobs is more cost effective.

Written practices are also useful to management in that they can easily become part of the agency's training curriculum. Several agencies with in-house training programs use their practices as teaching aids. For those without training programs who hire qualified technicians or rely on outside training, written practices take on even greater importance because they provide uniform work instructions to employees regardless of how and where they were taught. And for those who monitor worker performance, practices are absolutely essential in that they serve as a "common denominator," where all workers are measured against the same set of work instructions and expectations.

DETERMINING THE NEED FOR PRACTICES

Written practices may not be needed for all maintenance tasks—it all comes down to priorities. PMIs are certainly a good place to start because they are central to every good maintenance operation. Additionally, having detailed PMI practices for each vehicle type and key components goes a long way to help satisfy the Federal Transit Administration's (FTA's) Triennial Review requirements. In conducting its review, FTA requires grantees to show proof that they have a documented maintenance plan for federally funded buses and facilities. Examples of the material required by FTA include:

- A maintenance plan that is current for vehicles and facilities,
- PMI checklists consistent with the grantee's current operating fleet and with the manufacturer's minimum maintenance requirement for vehicles under warranty,
- Specific maintenance procedures for wheelchair lifts and other accessibility equipment,
- Proof that the grantee's maintenance plan and PMI activities ensure that assets are protected from deterioration and reach their maximum useful life,
- A record-keeping system that permanently records the maintenance history of facilities and equipment, and
- A schedule for facility/equipment PMIs.

The questions below will help you prioritize the need for maintenance practices. Although no set number of "yes" responses would indicate a need to develop a practice, the issues raised here will hopefully cause you to recognize the many benefits offered by practices and then motivate you to prioritize and develop them.

1. Are there regulatory requirements that would be better served by having documented practices in place?
2. Is there a need to document compliance with any specific requirement?
3. Are there excessive shop comebacks and/or road calls that result from improper repair or inspection activities?
4. Is there a lack of consistency in performing certain inspections or repairs from one mechanic to another or from one maintenance facility to another (e.g., those with different lifts, layout, and equipment)?
5. Are the tasks on a particular job transferred to another mechanic on a different work shift (i.e., where the second mechanic would need to know where the first left off)?

6. Is there a risk of warranty loss due to improper maintenance in specific areas?
7. Would there be a benefit in establishing time standards and monitoring compliances with those standards for specific repairs or inspections?
8. Would there be a benefit in documenting the need for special tools, safety precautions, or the handling of hazardous waste for specific inspections or repairs?
9. Would there be a benefit in identifying in advance all of the parts (individual or kits) needed to perform a specific maintenance job?
10. Would instructions written in another language, such as Spanish, improve the quality of inspections and repairs?
11. Would there be a benefit in identifying the total cost (i.e., parts and labor) for specific maintenance jobs?
12. Would there be a benefit in ensuring consistency between classroom training and the way maintenance jobs are carried out in the shop?

The issues raised in these questions can all be addressed by maintenance practices. A logical approach would be to first develop or improve practices pertaining to PMIs and then move on to specific areas that generate the most road calls, repeat failures, and other unscheduled maintenance activities.

CHAPTER 2

REFERENCE MATERIALS AND WEB BOARD USE

OVERVIEW

This chapter offers guidance on a wide range of subjects to address in preparation for writing the actual practice. The chapter begins with a primer on legal considerations, *which all Guidebook users are strongly urged to read.* The chapter continues by explaining how to locate essential background material, such as manufacturer's manuals and other publications, by using the Internet-based Web Board or more traditional means. It then describes how to prioritize the collected material, include any local conditions that may affect the practice, develop standard repair times, and integrate practices with your training program. The chapter concludes with an overview of regulatory and safety issues. Although the material is extensive, you can use it as you would any reference document by reading the chapter in its entirety or by using the table of contents to locate material of particular interest and need.

PART 1: LEGAL CONSIDERATIONS

Overview

Virtually every human activity involves legal considerations. Developing and sharing maintenance practices is no different. As part of this project, a law firm was consulted with regard to some of the legal issues involved. The firm was asked to provide examples of clauses and disclaimers that can be used when sharing practices with others. The primer prepared by the legal team is included in its entirety as Appendix A. This section summarizes and simplifies the material to offer a quick reference. Complex legal information provided here *cannot* take the place of a licensed and competent attorney who is familiar with the particular laws of your jurisdiction and the particular laws, rules, policies, and guidelines that govern behavior within the scope of your duties.[1] A review of legal issues should not dissuade you from developing or sharing practices, but serves as a foundation to help you develop and share maintenance practices without violating the rights of others.

[1] No attorney-client relationship exists between the reader and the law firm that was consulted for this project, its members, employees, affiliates, or assigns.

Intellectual Property

Loosely defined, intellectual property is an asset derived from the work of a person's intellect or mind that can be protected by federal and state law. The Founding Fathers recognized the importance of protecting original ideas, as evidenced in the U.S. Constitution, which grants authors and inventors exclusive right to their material for a certain period of time. There are basically four types of intellectual property: copyrights, patents, trademarks, and trade secrets. Copyrights have the most significance to this project.

Copyrights

Protecting copyrights is the most important intellectual property consideration that agencies face when developing and sharing written maintenance practices. A copyright is defined as a work of authorship that is original and fixed in a tangible medium of expression, such as in a repair manual, computer document, or DVD. Copyrights are automatically protected; there is no legal requirement to file with the U. S. Copyright Office (at the Library of Congress). Examples of material protected by copyrights include, but are not limited to, literary works; computer programs (including databases and operating systems); pictorial, graphic, and sculptural works; audiovisual works; sound recordings; architectural works; agency practices; and original equipment manufacturer (OEM) manuals.

It is important to understand that copyrights protect the manner in which an idea or piece of information is conveyed, but not the idea or information itself. For example, when using copyrighted instructions as a reference for developing a practice on replacing brake linings, the words chosen are protected. However, the information (i.e., the procedures) on how to replace the brake linings is not.

Original works of authorship do not have to be registered with the U.S. Copyright Office to be protected because copyright law automatically protects any original material, including a maintenance practice or manual, once it is in a fixed format (e.g., printed in hard copy or saved on a computer's hard drive or CD). However, some people formally register their copyrighted material as an extra measure to dissuade misuse. To determine if material is formally registered

with the U.S. Copyright Office, look for a notation normally found within the first few pages of a work of authorship or affixed to the medium in some obvious manner, such as the copyright page of a book, manual, or other reference document.

When using the intellectual property of another, "giving credit where credit is due" is the best general rule. Credit for the material is given to the owners by citing the source and, if appropriate, by using text-editing devices such as indentions and quotation marks to show ownership by another. Acknowledgment of sources can be made in a footnote or directly in the body of the maintenance practice.

If you plan to use a photograph, chart, or other graphic illustration developed by another in your practice, a letter requesting permission to do so is normally appropriate. Likewise, if you plan to use large amounts of material (i.e., a full page or more of text) taken from a manual or other reference source, permission from the author and/or publisher is required. It is strongly recommended that you cite your sources so readers will not be misled into thinking that the information originated with you or your agency.

In general, there are three basic conditions under which you can use the material of another without requesting and receiving permission from the author or publisher:

1. **The idea, not the expression, is used.** Paraphrasing information is fine as long as you do not copy the original material word for word.
2. **The material is in the "public domain" and so does not enjoy copyright protection.** This condition pertains to copyrighted material that is no longer or never was covered by copyright. In some cases, the author or publisher may have given express permission for use of the material by the public.
3. **The use falls under "fair use" doctrine.** Fair use doctrine allows for limited public use of copyrighted material without the danger of infringement. The factors to consider regarding this project and fair use is whether the use is strictly for an educational, noncommercial use; how much of the original material is used; whether the original material is fiction or nonfiction; and whether your use unfairly uses the original work. In the case of maintenance practices to be shared with other agencies, the fair use doctrine applies because there is no intention to sell the maintenance practice, it is a nonfictional work, and the bulk of the text will be original in nature.

When none of the above three conditions apply, you must request and receive permission from the author or publisher. Use the sample letter found as part of Appendix A as an example of how to ask the owner of intellectual property for permission to use their material.

The following notations can be used to protect your own intellectual property if required:

- The copyright notice ("©"),
- The year of publication (not year of inception),
- The name of the copyright owner (not necessarily the author), and
- Contact information (e.g., © 2005, Center City Transit, Center City, CT).

These notations give public notice and can dissuade users against improper use. Appendix A includes other examples of ways to identify and apply copyright notations.

Patents

A patent is a right given by the federal government to exclude anyone other than the owner of the patent from making, using, or selling an invention as described and claimed in the patent. Any invention with a registered patent will normally have an inscription, such as U.S. Pat. Reg. No. 00000000. In some cases, this information is located on packaging or other labeling that accompanies the invention.

If it is necessary to reference a patent held by another when developing a maintenance practice, you are allowed to discuss, reference, explain, and compare any information within the patent. However, you cannot use the technology disclosed in the patent without first obtaining permission (i.e., a license) from the patent owner. For example, if you purchase a patented tool to remove cylinder heads on a specific engine, you can use the tool, reference it in your practice, and describe how it functions. You cannot, however, use information contained in the patent to reproduce the tool without first obtaining a license. If you or your agency patents an invention, you must cite the patent registration number at a minimum the first time the invention is referred to.

Trademarks

A trademark is defined as a word, phrase, symbol, or design, or a combination of these things, that identifies and distinguishes the source of the goods of one party from those of others. In some cases, trademark owners who provide only services use the specific term "service mark" instead of the general term "trademark," but there is no legal distinction between the two; thus, service marks receive the same protection as other trademarks. Trademark registrations can be renewed indefinitely and may last forever as long as the trademark is continually used in commerce to identify the specified goods or services.

If you use the registered trademarks of others in your practice, you may want to place the "®" symbol after the trademark (i.e., the ACME Engine Company®). If your agency needs to create and protect its own trademarks, you can do so by using "®" for registered trademarks, "™" for unregistered

trademarks, or "SM" for unregistered service marks (i.e., unregistered trademarks for services).

Trade Secrets

A trade secret is defined as a piece of information or a process that derives economic value from not being generally known and from not being readily ascertainable. In other words, a trade secret protects valuable, nonpublic information from being disclosed. There is no particular way to notify the public whether a trade secret exists. Therefore, you are not liable if you independently discover or even knowingly "reverse engineer" a trade secret of another. The moment a trade secret is disclosed by someone, trade secret rights are lost. To be held liable for a trade secret infringement, you must violate a confidentiality agreement or steal the secret. If you or your agency has developed information that you believe should be protected by trade secret laws, you need to work closely with an attorney to maintain the level of secrecy necessary. Remember, once information is published (i.e., in a practice), it is no longer a trade secret.

Consequences of Not Protecting Intellectual Property

When using reference material to develop practices, you are responsible for maintaining the integrity of the intellectual property of another. Simply put, *it is unlawful to present a creative endeavor (i.e., patent, trademark, or copyright) of another as your own.*

Examples and Clauses

Appendix A includes a variety of examples and clauses that you may use (permission to use is granted) or modify as needed when developing and sharing maintenance practices. Included are:

- An example of a letter to request permission to use resources,
- Disclaimers to use when sharing practices with others to forewarn them that the agency providing the information is not liable for the information or any consequences that may follow from the use of the information, and
- An indemnity example to hold your agency harmless from any claim made by any third party due to or arising out of using your practice.

Web Board Disclaimer

Any practice posted on the TRB Web Board is subject to the following disclaimer, which is included on the Web Board site: Those downloading practices from the TRB Web Board do so with the understanding that:

> The information contained in the published content is provided as a service to the bus transit community, and does not constitute advice. Every attempt was made to provide quality information for the purposes outlined for this project, but we make no claims, promises, or guarantees about the accuracy, completeness, or adequacy of the content. Maintenance advice must be tailored to the specific circumstances of each agency. Because bus maintenance practices can change without notice, nothing provided herein should be used as a substitute for the advice of competent mechanics and/or maintenance crews.

If agencies desire, they can add this or another disclaimer to any practice posted on the Web Board. The practice format presented in Chapter 4 has a section for including any disclaimer that your agency deems appropriate.

PART 2: REFERENCE MATERIAL

Overview

In addition to your agency's collective knowledge and experiences, you will need to consider reference material from outside sources. Otherwise, you may be perpetuating poor and inefficient practices as a tradition. *The "we've been doing it that way for years" method may not be the best and in fact may be incorrect or in direct violation of a regulation!* Manufacturers' manuals serve as the primary reference source because of the inherent understanding OEMs have of their own products. Other essential reference materials include practices developed by other agencies; standards and RPs developed by APTA, the trucking industry, and other professional organizations; and federal and local regulatory compliance material.

This section describes how essential reference material can be located using the TRB Web Board or more traditional means (e.g., phone or mail). Because the Web Board can be used to locate reference material, including practices developed by other agencies, instructions for using the Web Board are provided below.

Using the Web Board

Background

TRB sponsors several Web Boards for sharing information. Of particular interest to maintenance personnel is the Transit Fleet Maintenance Committee's Web Board located at http://webboard.trb.org/~A1E16/login. It contains several bus maintenance–related categories (called "conferences") to help agencies exchange information on several subjects. It also includes a direct link to the Maintenance Practices Web Board established as part of this project to develop and share bus maintenance practices. Other conferences are dedicated

to small-city, rural, and intercity agencies; general bus fleet maintenance; maintenance facilities; clean air technology; EPA emission standards; mechanic certification; training; and others. After logging into the Web Board (login instructions are provided below), agencies can read existing messages posted under a variety of headings to obtain information or post messages to provide information of benefit to others.

Maintenance Practices Web Board

TRB's Bus Maintenance Practices Web Board was created as a Guidebook companion to help agencies locate reference material, develop practices, and share practices with others. The Web Board contains an electronic version of this Guidebook and the MS Word template, both of which can be downloaded from that site. A hard copy of the template instructions and the template itself are included as Appendix B and Appendix C, respectively.

The template includes links to reference sections of the Guidebook that contain website addresses that you can input to your web browser, allowing you to review reference material in one "window" while composing your practice in another. For those without Internet access, sufficient contact information is provided in this chapter to obtain reference materials using traditional means (e.g., telephoning and writing for materials).

Login Information. As with all TRB Web Boards, agencies will need to formally log in. To log in, you must register as a user of the Transit Fleet Maintenance Committee's Web Board located at http://webboard.trb.org/~A1E16/login. To register, click on "New User," read the "New User Information" material, and complete the registration form. You can also enter the site as a "Guest," but then conferences are limited to read-only access. (Existing users of the Transit Fleet Maintenance Committee's Web Board already have access to this site and do *not* need to register again).

To enter the Maintenance Practices Web Board, click on the "Maintenance Practices Web Board" conference. A "Use this link for access" message will appear. Click on it, then click on the "http://webboard.trb.org/~E5/login" address that appears in the column to the right, which will take you directly to the Maintenance Practices Web Board.

Structure. The Maintenance Practices Web Board includes the following major conferences, although this structure may change over time as the Web Board grows and develops:

- **Instructions for Using This Site.** Or use the "Help" feature.
- **Legal Disclaimer.** Applies to all users of the Web Board.
- **Guidebook Download.** Also includes the MS Word template and instructions.
- **Posting and Downloading Existing Agency Practices.** General instructions for:
  - Downloading existing agency practices (there are 13 heading groups).
  - Uploading practices.
  - Compressing file size.
  - Protocol for naming practices (with title sequence for cataloging purposes).
- **Locating Other Reference Materials.** General instructions for locating:
  - Bus and Component OEM Manuals and Bulletins.
  - TMC Practices Assembled for APTA.
  - Other ATA/TMC Trucking Publications.
  - SAE Publications.
  - TRB Publications.
  - APTA Publications.
  - CTAA Publications.
  - Other materials.

It is important to note that the only materials downloadable from the Maintenance Practices Web Board are the agency practices posted there, the Guidebook itself, and the MS Word template. All other reference materials must be obtained by using the Internet addresses provided. You can also upload (i.e., contribute) any practice to the Web Board regardless of whether it was developed from the Guidebook. A sequence to titling the practice found in Chapter 5 must be followed for cataloging purposes.

Obtaining Reference Material

Overview

The various sections below summarize reference materials provided by various sources followed by instructions on how to obtain the materials. Agencies can use the Internet addresses or the mail/telephone contact information provided below to request material. Before using any reference materials, however, it is strongly recommended that you read Part 1, Legal Considerations, at the beginning of this chapter and Appendix A.

Existing Agency Practices

Existing agency practices can be a valuable source for reference material because they were developed by agencies that operate similar equipment. Several agencies have posted their practices on the TRB Maintenance Practices Web Board, which can be downloaded as described above. Those without Internet access will not be able to obtain these practices.

Bus and Component OEM Manuals

Overview. Bus and major component manufacturers support their products through a variety of maintenance- and repair-related materials, which serve as the foundation for developing agency-specific maintenance practices for two important reasons. First, the materials represent the official procedures developed and authorized by the OEM, the company that actually produced the product. Second, following factory-authorized procedures is usually required to maintain warranty coverage and to receive reimbursement for any product defects.

In a perfect world, bus manufacturers would supply manuals that could be used "as is" to guide agencies through repair and maintenance tasks. The reality is that tailoring repair and maintenance procedures to match the actual vehicle produced and specific agency conditions is the exception, not the rule. Larger agencies typically have more success in getting OEMs to tailor their maintenance materials, while those with fewer resources must make due with available materials.

An inherent problem with producing "tailor made" procedures is that so many of the components used in buses are produced by a variety of vendors, making it difficult to accurately reflect the specific vehicle produced for a given agency. Another problem is that bus manufacturers often supplement their own procedures with material produced by component suppliers. As a result, a "gap" often exists where the bus manufacturer–developed procedures leave off and the component-specific procedures begin. In other cases, bus OEMs simply use a single procedure to describe similar components supplied by many vendors, and this procedure may not reflect the actual component installed.

The incomplete nature of OEM manuals strengthens the need for agencies to "fill in the missing pieces" and develop their own practices. Although generic at times, the bulk of information provided by bus OEMs is sufficient as a starting point to develop agency-specific practices.

Types of OEM Manuals. Typical manuals supplied by bus OEMs include:

- Operator's manuals, which provide instructions on how to operate the bus.
- Parts manuals, which list and describe the various replacement parts used in the bus.
- Schematics, which show connections and interrelationships of the many electrical, pneumatic, and hydraulic systems and subsystems to facilitate troubleshooting and testing.
- Service and maintenance manuals, which typically contain information on routine maintenance tasks and recommended service intervals for engine and transmission oil changes, filter changes, brake adjustments, lubrication of other systems, and periodic inspections.
- System, subsystem, and component troubleshooting procedures, including test values.
- Component removal and replacement procedures.
- Component disassembly, overhauls, re-assembly, and test procedures, which are typically provided by suppliers to the bus manufacturer.

Formats. OEM publications are typically provided in two formats: printed paper (either bound or loose leaf) and electronic media, such as CDs. Some OEMs supply videos showing specific maintenance procedures, but they tend to be more generic due to their high production costs.

The drawbacks of paper media are well known and include the difficulty to distribute, change, update, and discard information. CDs contain all the information found in printed manuals, but in a much smaller package. In addition to their durability and low cost, CDs are easy to revise by bus manufacturers and can be distributed more easily than bulky paper manuals. Additionally, material contained on CDs can be downloaded electronically by agencies for easy distribution to satellite garage facilities.

CDs also have the ability to be integrated as source documents in an agency's overall maintenance information system (MIS). A significant advantage of integrating maintenance manual material with an MIS is the ease with which information is changed to suit agency requirements or updated to reflect changing technology and procedures.

Standard OEM Repair Times. In addition to producing repair and parts manuals, most OEMs develop standard repair times for common tasks as a basis for determining warranty reimbursement. Most of these times pertain to "remove and replace" procedures, although some OEMs, especially those manufacturing major components, have standard repair times for specific rebuilding procedures. When using bus OEM times in practices, agencies should be aware that the times may not be realistic ones because many are developed as part of the manufacturing process, which may not be applicable to a fully assembled component or bus. Additional information on developing time standards is found in Part 5 below.

Contact Information. The first place to obtain vehicle-related manuals and information is through the bus OEMs. They are the entity contracted to build and deliver the bus and the party responsible for providing maintenance manuals, even though many subsystems and components (e.g., engines, transmissions, axles, and radios) are provided by others. If adequate material is not available from that source, or information is required for non–vehicle-specific equipment (e.g., bus washers or facility equipment), then the subsystems or component supplier/vendor should be contacted directly.

Agencies are strongly urged to obtain OEM maintenance/repair manuals and standard repair times (even if worker time

is not monitored) *as part of the overall bus procurement*. Agencies should specify OEM material in both hard-copy and electronic formats (e.g., CDs) in varying quantities depending on the number of satellite facilities, the number of maintenance personnel, and whether or not the manuals will also be used for training purposes. CDs, however, require that maintenance personnel have access to a laptop or personal computer, which could also be obtained as part of the overall bus procurement. Requests for manuals and other material should include a requirement that the material be updated by the OEM throughout the vehicle's useful life.

Several methods can be used to obtain manuals on equipment you already have. Begin by contacting the service representative of the bus or product. If you don't know who the service representative is, you can get a listing of most suppliers through APTA's Catalog of Member Products and Services (COMPS). Although only APTA members are included on the list, the service is available to both members and nonmembers *free of charge*. Those without Internet access can contact APTA's Information Center (see the "APTA" section below for details) and they will print a list of suppliers in a given area and mail it to you. Otherwise, go to the APTA website at www.apta.com, click on "Research and Statistics" or "E-Business" and then on "COMPS" for an alphabetical listing of transit-related products and services. The listing includes the contact information (i.e., address, phone, and email) for each supplier. Another method is to undertake a general Internet search for the specific company or product.

Most bus and component OEMs have websites. Some provide open access to manuals, repair times, service bulletins, and other information on their websites. Some require passwords to enter their sites, while others offer printed material in various languages. Most OEMs copyright their service manuals and have some type of disclaimer regarding application of the information contained in them. See Part 1, Legal Considerations, at the beginning of this chapter and Appendix A for information on using copyrighted material.

Recommendations. Since OEM manuals are essential to every maintenance practice, it is highly recommended that agencies:

- Request that bus and component OEMs improve the dissemination of technical information by placing maintenance information and standard repair times on their websites. These requirements can be made through the bus procurement process.
- Be more specific in bus procurements regarding the type and content of written practices required from the bus OEM.
- Provide more convenient access to OEM manuals by maintenance personnel.
- Maintain up-to-date OEM information in your agency's MIS systems.
- Provide OEMs with any Intelligent Transportation System (ITS) and/or MIS interface issues that they need to be aware of when providing electronic documentation.

Trucking Industry Publications

Background. The American Trucking Association (ATA) represents the interests of the trucking industry. The Truck Maintenance Council (TMC), one of the ATA's councils, provides maintenance and technology support to the trucking industry and develops a series of RPs.

Much of the equipment used by the trucking industry is similar to that used in transit buses, with many components and suppliers common to both. As a result, much can be learned from TMC programs with respect to maintenance practices. When researching TMC practices, however, keep in mind that TMC RPs reflect a consensus of its members and may not be appropriate for all transit bus applications.

Truck RPs Assembled for Transit. In one trucking program of particular interest, the TMC, under contract to APTA, identified and assembled a collection of trucking RPs closely applicable to transit buses. This collection of nearly 100 RPs, entitled "Recommended Maintenance Practices for Transit Buses," was reviewed and endorsed by APTA's Bus Equipment and Maintenance Committee. Material contained in this collection of off-the-shelf RPs is essential to the library of resources that agencies should consider when developing their own maintenance practices. Although the RPs were written for trucks, much of the material contained within the RPs can be applied to buses either directly or with some modification. More importantly, the procedures represent the best thinking of an industry with vast experiences and resources.

RPs contained in "Recommended Maintenance Practices for Transit Buses" are grouped under 10 ATA categories:

S.1	Electrical and Instruments
S.2	Tires & Wheels
S.3	Engines
S.4	Cab & Controls
S.5	Fleet Maintenance Management
S.6	Chassis
S.8	Cost Control Methods
S.11	Vehicle Energy Conservation
S.12	Total Vehicle Electronics
S.14	Light- and Medium-Duty

As indicated by these categories, some of the nomenclature (e.g., Cab) is specific to trucks but can be applied to buses. For example, RP 311, Cold Weather Operation, provides information useful to agencies operating in cold climates. It includes recommendations for developing a cold weather operation maintenance checklist and provides

information on engine coolants and lubricants, batteries, and other cold-weather topics developed for trucks but also applicable to buses. Information on obtaining "Recommended Maintenance Practices for Transit Buses" is provided below under the "APTA" heading.

Other TMC Publications. In addition to those RPs for APTA, the ATA maintains and distributes a host of RPs in hard-copy format. The RPs are available to ATA members free of charge as part of their annual dues. Non–ATA members, however, can purchase hard copies of the RPs individually. A two-volume set of all TMC RPs is available to nonmembers at $195, while individual RPs are available to nonmembers at $25 each.

Contact Information.

Mail:

ATC
Technology & Maintenance Council of the American Trucking Association
2200 Mill Road
Alexandria, VA 22314

Telephone:

703-838-1761 or 703-838-1763

E-mail:

tmc@truckline.com

Internet:

A complete index of all TMC RPs, which includes a brief description of each RP, is available from the TMC's website at www.truckline.com. To find the RPs, click on "TMC," then on "Recommended Practices" in the right-hand column, and then on "Complete listing of all officially adopted RPs."

Society of Automotive Engineers

Overview. The Society of Automotive Engineers (SAE) is a technical society dedicated to advancing mobility engineering. Publications include books, RPs, standards, and individually authored SAE papers. SAE standards are especially helpful in that they are used throughout the world for various items such as fasteners, thread sizes, and material properties.

Standards. Several SAE standards could be helpful references for transit systems developing specific maintenance practices. Examples include J2210, "Recovery/Recycling Equipment for Mobile Air-Conditioning Systems," and J2211, "Recommended Service Procedure for the Containment of HFC-134a." Others examples include SAE J1128 and J1292, which provide useful information on the mechanical properties of electrical wiring.

Locating SAE Publications. Individual SAE standards can be found using several methods. "The Ground Vehicle Standards Index" offers a complete listing of thousands of Information Reports, RPs, J-Series Reports, and Handbook supplements. The current cost of this index is $36 for members and $45 for nonmembers. This index can serve as a valuable asset when attempting to locate specific SAE standards when preparing practices.

Individual SAE standards are available at $59 each, either in hard-copy version (via postal services) or through an Internet-download process. From the SAE home page (see Internet address below) you can search for individual standards and obtain a summary of the standard, including the title, publication date, issuing committee, and scope. SAE technical papers can be purchased from the SAE via mail or downloaded at a current cost of about $10.00 each for SAE members or $12 each for nonmembers.

The SAE Handbook, which contains all SAE standards, is published in a three-volume set in either hard-copy or CD format. The current fee is $450 for SAE members and $595 for nonmembers.

SAE publications, including the SAE Handbook, can also be obtained through public libraries, universities, and APTA (see "Other Sources for SAE Publications" below for additional information).

Contact Information.

Mail:

SAE Automotive Headquarters
755 W. Big Beaver Road, Suite 1600
Troy, MI 48084

Telephone:

248-273-2455

E-mail:

automotivehq@sae.org

Internet:

To find SAE standards, go to the SAE website at www.sae.org. Click on "Shop the SAE Store," then "Standards," and then browse under "Ground Vehicle." Under "Repair & Service Operations," for example, you will find SAE J2210 and J2211 referenced above. Under "Wiring" you can find J1128 and J1292, also referenced above. Another method is to use the search feature located on the home page.

SAE papers can also be found at www.sae.org by clicking on "Papers," then by browsing the "Ground Vehicle" area. For example, under "Maintenance and Operations," you can find several useful papers, including #2001-01-2814, "Cooling System Development and Validation for the Urban Bus."

Other Sources for SAE Publications. SAE publications can also be found through other sources. The APTA

Information Center (see "APTA" below for contact information) maintains a recent copy of the SAE Handbook, as do many public libraries. Additionally, engineering and technical colleges and universities generally have the SAE Handbook and other SAE publications available for reference.

TRB

Overview. TRB is a valuable resource for locating reference material on a variety of transit topics, including bus maintenance and technology. A division of the National Research Council (NRC), which serves as an independent adviser to the federal government on scientific and technical questions of national importance, TRB promotes innovation, progress, sharing of information, and technical excellence. The Transit Cooperative Research Program (TCRP) is administered by TRB to develop near-term, practical solutions to problems facing the transit industry. This Guidebook, for example, was developed under the TCRP program. TCRP topics selected for research are generated from transit agencies, standing volunteer TRB committees, APTA committees, and others involved directly with the transit industry. In fact, the problem statement that formed the basis for this Guidebook was generated by the TRB Committee on Transit Fleet Maintenance.

Of particular interest to developing maintenance practices are the TCRP reports and syntheses. Engineering of Vehicles and Equipment, Engineering of Facilities, and Maintenance are three research fields of special interest. One example is *TCRP Report 29: Closing the Knowledge Gap for Transit Maintenance Employees: A Systems Approach*, which presents guidelines on evaluating and implementing strategies to improve maintenance workforce skills. Several agencies have distributed copies to their maintenance personnel, use the report as a basis for staff meetings, or use the document as a basic text for maintenance management training classes.

Other TCRP publications of interest to maintenance practices include:

- *TCRP Synthesis 1: Safe Operating Procedures for Alternative Fuel Buses*
- *TCRP Synthesis 7: Regulatory Impacts of Design and Retrofit of Bus Maintenance Facilities*
- *TCRP Synthesis 9: Waste Control Practices at Bus Maintenance Facilities*
- *TCRP Synthesis 12: Transit Bus Service Line and Cleaning Functions*
- *TCRP Synthesis 22: Monitoring Bus Maintenance Performance*
- *TCRP Synthesis 44: Training for On-Board Bus Electronics*
- *TCRP Synthesis 54: Maintenance Productivity Practices*
- *TCRP Synthesis 58: Emergency Response Procedures for Natural Gas Transit Vehicles*
- *TCRP Report 43: Understanding and Applying Advanced On-Board Bus Electronics*
- *TCRP Report 96: Determining Training for New Technologies: A Decision Game and Facilitation Guide*

Contact Information.

Mail:

Keck Center of the National Academies
Transportation Research Board
500 Fifth Street, NW
Washington, DC 20001

Telephone:

202-334-2934

Internet:

The TRB website at www.trb.org is a valuable resource for locating material on all research topics. From the TRB website, click on "Publications" to find a catalog of TRB publications, TCRP project reports, the Transportation Research Information Services (TRIS) database, and many other reports and links to TRB's extensive research databases. You can also use the search function or click on the "TRB Bookstore" to find information on how to obtain published research reports.

In addition, www.tcrponline.org will take you directly to a TCRP dissemination site that is maintained by APTA on behalf of the TCRP and contains all of the TCRP publications, including those listed above. Once at the site, you can use the search function or choose from general topics. The "Publications" section of the TCRP site includes two categories of special interest: Bus Transit—Maintenance, and Bus Transit—Technology. Both categories contain the various TCRP reports and syntheses available. These publications can be ordered from APTA at www.tcrponline.org.

APTA

Overview. APTA is a nonprofit international association of over 1,500 public and private member organizations, including transit systems; planning, design, construction, and finance firms; product and service providers; academic institutions; transit associations; and state departments of transportation. Over 90 percent of persons using public transportation in the United States and Canada are served by APTA members.

Recommended Maintenance Practices for Transit Buses. Several APTA activities and publications can be of assistance to agencies in developing maintenance practices. As

mentioned above under "TMC," APTA worked with the TMC to publish "Recommended Maintenance Practices for Transit Buses," a series of trucking RPs applicable to buses. This document can be ordered from APTA at $50 for members and $100 for nonmembers.

TCRP Reports Available Through APTA. TCRP reports published by TRB are available through APTA free of charge at www.tcrponline.org.

APTA Bus Standards Program Reports. The APTA Transit Bus Standards Development Program is an outgrowth of TCRP Project C-14 to develop consensus-based standards for the transit bus industry. These standards, when developed, will consist of RPs applied generically and voluntarily to the entire transit industry. The first standards being developed are those for vehicles and related equipment, including:

- Recommended Practice for Transit Bus In-Service Brake Stopping Performance Testing
- Recommended Practice for Transit Bus Foundation Brake Replacement Lining Classification
- Recommended Practice for Transit Bus Total Cooling System Performance Capability Testing
- Recommended Practice for Transit Bus Heating, Ventilation, and Air Conditioning (HVAC) System Instrumentation and Performance Testing
- Recommended Practice for Transit Bus Brake Shoe Rebuild
- Recommended Practice for Transit Bus Vehicle Data Recorders
- Recommended Practice for Transit Bus Fire Safety
- Recommended Practice for Transit Bus Operator Qualification and Training

RPs for operating practices, safety, and other topics are also underway. When finalized, the APTA bus standards will be posted on the APTA website.

Contact Information.

Mail:

American Public Transportation Association
1666 K Street, NW
Washington, DC 20006

Telephone:

General: 202-496-4800
Information Center: 202-496-4889

Internet:

To obtain a copy of the truck RPs assembled for APTA by the TMC entitled "Recommended Maintenance Practices for Transit Buses," go to www.apta.com. Click on "Book Store," then "Catalog," then "Operations and Technical Services," and then search for "Recommended Maintenance Practices for Transit Buses." For a listing of bus and component OEMs, click on "E Business," and then "COMPS." For TCRP reports click on "Book Store," and then select the link under "Other Resources" to order the TCRP reports.

The APTA "Book Store" site also contains several other publications helpful to those developing maintenance practices. Click on "Operations and Technical Services" to find the following publications: "Guidelines for Bus Maintenance," "New Bus Manufacturing Inspection Guidelines," and "Wedge Brake Rebuild Recommended Practice."

PART 3: PRIORITIZING REFERENCE MATERIAL

After collecting all of the reference material needed to develop practices, you can follow the suggestions below to isolate the most useful information.

1. If the OEM bus and component procedures are available, use them for two important reasons:
   - Manufacturer's procedures represent essential source material.
   - Following manufacturer's procedures helps to ensure warranty coverage.
2. Eliminate unsuitable reference material. Do not use materials that are:
   - Copyrighted (unless procedures found above in Part 1, Legal Considerations, are followed),
   - Out of date,
   - Incorrect,
   - Confusing, or
   - Unsuitable for your local climate or operating conditions.
3. Compare and evaluate the remaining reference materials.
   - Decide which is the most thorough, accurate, easy to understand, and suitable to your local conditions and shop environment.
   - Select photos and illustrations that are the easiest to understand and that clearly show complex equipment or procedures. If none are suitable, take your own photos (see Chapter 3 for details).
   - Identify the information you want to use from each source using Post-It® notes or similar markers. For example, one source may provide the best list of tools needed, while another may provide the clearest step-by-step instructions.
4. Synthesize selected reference text taken from the various sources and organize it under the appropriate sections of the practice headings.
   - Those using the electronic Word template can type the synthesized material directly into appropriate

sections of the template. (Depending on copyright restrictions, you may also be able to copy and paste material from an electronic source.)
- Those not using the Word template will have to enter the material manually into the Chapter 4 practice format (or any format you eventually decide upon).
- Supplement the reference material with appropriate material developed from your agency's collective experiences.

5. Improve the material taken from the various sources by applying the Guidebook instructions for writing effectively and inserting photographs/illustrations found in Chapter 3. When using text from more than one source, it is especially important to revise the synthesized text into a consistent writing style to make it easier to read.
6. Review Part 1 above and Appendix A, and consult with an attorney if available to make certain that you have used all reference materials obtained from outside sources in a legal manner.

PART 4: TAILORING PRACTICES TO LOCAL CONDITIONS

Background

An element of this research is to provide information on tailoring maintenance practices to local conditions. An initial survey was conducted, and 62 systems responded. Agencies were asked how they felt regarding the need to tailor maintenance practices as a result of certain local conditions. Responses are summarized in Table 2-1.

The most important local condition noted by agencies responding was severe weather. Included in this category were severe heat, cold, dust, and road salt. Transit agencies and equipment OEMs were contacted for their insights into special steps taken to address unique local conditions. A posting on TRB and APTA Internet-based Web Boards asked agencies to provide examples of any special steps taken to maintain and repair buses as a result of unique environmental and operating conditions.

TABLE 2-1 Conditions requiring special consideration

Condition	Percentage of Agencies that Felt the Condition Required Special Consideration
Severe Weather	66
Fleet Makeup	52
Geographic Area	44
Workforce Considerations	40
Fleet Size	35
Number of Locations	32
Contracted Maintenance	32
Workshop Layout	18

Another step was to research published information that addresses special maintenance procedures to account for unique local conditions. Two publications were found, and both address maintenance practices pertaining to cold weather operation. The first source, "TMC RP 311—Cold Weather Operation," discusses the proper maintenance methods for preparing a heavy-duty truck for cold weather operation (+40 to –40ºF). This RP is included in the collection of TMC RPs entitled "Recommended Maintenance Practices for Transit Buses," which is available from APTA as indicated in Part 2 above. The second source includes operations and maintenance manuals prepared by engine OEMs for cold weather operation. Major engine OEMs all have manuals that address cold weather operation. Contact information for most of these OEMs can be found in the Bus and Component OEM section in Part 2 above using APTA's COMPS service.

Two primary conclusions were identified from this research. First, most transit systems are so focused on how they perform their own maintenance work that they do not view any of their procedures as being "unique." For example, if they only have pits in their shop, they have adapted all their maintenance procedures around this shop condition. The second conclusion is that weather-related conditions (e.g., road salt and leaves) are virtually the only conditions for which special maintenance practices have been developed. Except for basing PMI intervals on duty cycle at MTA New York City Transit (MTA NYCT), no significant agency practice was found that addresses a unique shop condition, fleet size, or workforce characteristic. While these special practices exist, agencies do not view them as unique.

The format used in Chapter 4 to develop maintenance practices includes a section where agencies can enter a summary of special steps taken as a result of a condition unique to their operation. Summarizing these special steps will alert your agency's maintenance personnel, some of whom may come from different climate and shop conditions, of the importance of following certain procedures that they may not understand as being necessary. The local condition summaries will also be helpful to other agencies considering your practice as a reference to give them insight to determine if all sections are applicable to their particular operation.

Weather-Related Conditions

Two sections below address weather-related conditions. The first includes ways to obtain weather information; the second includes specific maintenance procedures suggested by agencies to address weather conditions.

Weather Information

Agencies can obtain information on weather by visiting www.worldclimate.com and www.noaa.gov (the National Oceanic and Atmospheric Administration, or NOAA). Both include useful climatic information, but the NOAA site charges a fee for some of its information. Information at these sites could be useful when considering other agency practices.

After reviewing the average annual temperature data, it is possible to classify agencies as being in one of three climates based on their annual average temperature:

- Cold: 49ºF or less;
- Temperate: between 50ºF and 59ºF; or
- Warm: 60ºF or more.

Examples for each type of operating climate and their average annual temperatures are shown in Table 2-2. Agencies are reminded that the averages for the cities listed below do not show the differences between extreme low and extreme high temperatures that must be considered when comparing your agency's climate with another. Information regarding temperature extremes is available at the weather websites listed above.

Weather-Related Maintenance Suggestions

Suggestions for specific weather-related maintenance practices include the following.

Cold weather suggestions:

- When road salt is used, steam clean the bus undercarriage before each PMI.
- A new magnesium chloride de-icing salt solution is causing premature corrosion of transmission filters, electrical components, and other exposed bus components. Traces of this de-icing mixture are also being reported on new buses driven through regions that use these chemicals. Rinse bus undercarriages thoroughly, and carefully inspect radiators, charged air coolers, electrical connections, brake drums, and fasteners.
- Include an undercarriage wash and a high-pressure wheel wash during daily service line inspections.
- Check air dryers more frequently for moisture content.
- Conduct wheelchair lift PMIs more frequently to remove road salt and add lubrication.
- Check auxiliary engine heaters.
- Replace wheelchair lift pans with stainless steel ones as part of a mid-life refurbishment program or during new bus procurements.
- Sandblast and recoat the bus chassis as part of a mid-life program.

Warm weather suggestions:

- Conduct an extensive air conditioning PMI in preparation for summer.
- Clean out radiators monthly with a suitable solvent, and flush with water to prevent overheating.
- Tighten hose clamps during each PMI, and use clamps that apply a constant torque.
- Check air system integrity.
- Use special bearing lubricants.

Miscellaneous seasonal suggestions:

- Blow out radiators with air pressure to remove tree leaves in autumn months.
- Blow out radiators with air pressure to remove build up of seeds and leaves from trees.
- Add a wire mesh screen over the radiator door to catch leaves. Clean the wire mesh screen often to prevent clogging of the radiator.
- Flush brakes with clean fresh water after significant rain to remove abrasive debris carried into the brakes by the rain.

PART 5: DEVELOPING TIME STANDARDS

The use of standard repair times (SRTs) is a natural complement to maintenance practices in that one defines the procedures, while the other defines the average time needed to carry out the procedures. Assigning a time to jobs allows managers to better plan for maintenance staffing levels,

TABLE 2-2 Average climate classifications (in °F)

Cold	Temperate	Warm
Albany, NY = 47.3	Boston, MA = 51.3	Atlanta, GA = 61.2
Buffalo, NY = 47.7	New York, NY = 54.1	Dallas, TX = 66.2
Chicago, IL = 48.9	Philadelphia, PA = 54.1	Houston, TX = 68.7
Cleveland, OH = 49.5	Pittsburgh, PA = 52.0	Las Vegas, NV = 67.1
Detroit, MI = 48.6	San Francisco, CA = 57.0	Los Angeles, CA = 63.0
Minneapolis, MN = 44.8	Seattle, WA = 52.0	Miami, FL = 75.7
		New Orleans, LA = 68.0

budgeting, and scheduling; allows worker productivity to be measured; and serves as a useful tool in directing training resources. Use of SRTs varies from agency to agency and may not be appropriate for all. For those who see the merit in establishing them, the practice format presented in Chapter 4 includes a section where SRTs can be entered.

Basic requirements for establishing SRTs include:

- Establishment of uniform practices to ensure that each worker is measured against equal tasks,
- A process for establishing and validating the times so that they are in fact fair for the skill level required and can be repeated over time,
- A process to accurately monitor worker time on each job,
- A policy on how the standard times will be used within the agency, and
- Involvement by maintenance workers and their union in developing SRTs.

Uniform Procedures

It would be unfair to expect workers to perform to a given time standard unless there is a practice that defines the work procedures for all to follow in a uniform manner. This Guidebook provides the information needed to develop those practices. Without such practices, workers are free to choose whatever steps they feel are needed in order to "meet" the set time period. Practices are absolutely essential to provide the consistency needed to measure all workers equally and fairly.

Establishing Standard Repair Times

Agencies use a variety of methods to establish SRTs. The most comprehensive are based on industrial engineering (IE) processes that involve studying each work task, organizing those tasks in a logical and efficient sequence, assigning times to each task, and monitoring worker performance to fine-tune and validate the process. Some agencies, such as Milwaukee County Transit System, employ an industrial engineer to develop practices and SRTs, as the two are so closely allied. IE protocols used to develop SRTs can be reviewed in two publications: *Industrial Engineering Handbook* by Morley H. Mathewson[2] and *Industrial Engineering Methods and Controls* by Donald R. Herzog[3].

Agencies that develop SRTs typically apply fundamental IE concepts as a starting point using one or more of the following steps:

- Start with OEM-recommended "flat rate" times established for warranty reimbursement, and modify them based on the agency's own historical information.
- Time each task identified in the agency's maintenance practice. For example:
  - Turn engine control switch to "off" and open engine and transmission access doors: 30 sec.
  - Remove air conditioning belt guard: 5 min, 20 sec.
  - Total the times to determine the SRT for the entire job.
- Time the complete job by monitoring workers of various skill levels as they follow the written practice, and then use the average time to arrive at a fair SRT.
- Use SRTs developed by other agencies and adapt them to your own requirements.

Regardless of the timing method used, agencies need to consider many of the peripheral activities surrounding the job that must be accounted for in the SRT, such as the time needed to:

- Move the vehicle to and from the work area;
- Obtain and complete any necessary documentation;
- Obtain standard tools, special tools, and replacement parts;
- Take periodic work breaks;
- Address any unforeseen problems that may develop during the repair (e.g., if a fastener snaps during its removal, it takes on additional procedure to remove the broken stud);
- Clean up afterward; and
- Dispose of any hazardous waste.

SRTs also need to be based on the proficiency levels and job classifications (e.g., A-level mechanic and journeyman) of those authorized to do the jobs. Once developed, SRTs need to be validated to ensure they represent realistic time allotments and do not compromise work quality or safety. This validation is typically done by timing separately several properly trained and qualified workers or experienced supervisors as they perform the job. Based on collective feedback, procedures and times can then be adjusted accordingly. The validation process continues by periodically monitoring worker time on a given job and comparing it with the established SRT to determine the percentage of on-time completions.

Monitoring Time

SRTs are only effective if an agency has a way to accurately monitor worker time to determine if the SRTs are being met. Most agencies use work orders (also called repair orders) to monitor time by having workers write down start and stop times or use punch-style time clocks. Data entry clerks typically enter the information into the agency's MIS, which breaks out the various jobs and related times. Other agencies use more sophisticated methods that involve bar codes and other electronic monitoring devices. In addition to monitoring

[2] Mathewson, M.H., *Industrial Engineering Handbook*, 2nd ed., McGraw-Hill, New York, NY, 1963.

[3] Herzog, D.R., *Industrial Engineering Methods and Controls*, Reston Publishing Company, Reston, VA, 1985.

the entire job time, some agencies monitor job segments to determine where employees are having the most problems.

Setting Policy

Agencies that monitor worker time use the information in a variety of ways. Some use SRTs to provide employee incentives, to impose disciplinary action, or to direct additional training in specific areas. Other agencies, especially those where workers frequently rotate into different jobs, monitor per-job time but choose *not* to establish specific time standards. Instead, they use the times as a general indication to gauge overall worker performance across all jobs. If productivity diminishes over time on certain jobs, the worker can be called in to determine the reason. Other agencies choose to select an acceptable time range rather than imposing one set time for all to adhere. Regardless of how agencies use time standards, the policy on time standards needs to be shared with workers so they clearly understand how their performance is being measured.

Employee and Union Involvement

Employee and union involvement is absolutely essential to improving worker productivity. Although the subject of establishing time standards may be awkward, both labor and management must participate in the process, and each must come to see the benefits in establishing SRTs for the program to be successful. The process to develop time standards includes many opportunities for management and labor to work together, and union managers can be convinced of the benefits of adopting SRTs.[4]

In addition to labor and management working together, successful programs to develop SRTs include:

- An agreed upon process for resolving disputed SRTs and validating them,
- An emphasis on improving worker productivity and directing training rather than disciplinary action,
- An agreed upon policy on how SRT performance will affect staffing levels and the outsourcing of jobs, and
- Incentives given to those who meet an established percentage of SRTs.

Other Sources

Several publications are available to help agencies develop SRTs, including the two books referenced above on IE principles. Of particular interest is *TCRP Synthesis 54: Maintenance Productivity Practices*, which includes several case studies of agencies implementing SRT programs.[5] Included are case study examples of agency-developed SRT programs, time study analysis charts, a comprehensive bibliography and reference list, and other helpful information. *TCRP Synthesis 22: Monitoring Bus Maintenance Performance* also contains information on monitoring time and using SRTs.[6] These and other TCRP studies are available through TRB and APTA as described in Part 2 above.

Another helpful publication is TMC RP 804, "Labor Productivity Measurement," included in "Recommended Maintenance Practices for Transit Buses," the collection of nearly 100 TMC RPs available through APTA (also described in Part 2 above). Although this RP is based on the TMC's unique coding system, it contains useful information and worksheets on monitoring worker time that can be modified for individual agency use.

PART 6: INTEGRATING PRACTICES WITH TRAINING

For agencies with in-house training programs, maintenance practices can become part of the curriculum where classroom instructional material corresponds to actual work expectations on the shop floor. For agencies that rely on outside training programs or hire prequalified workers, practices document how each job is to be performed regardless of where workers received their training or experiences.

The effort put into developing maintenance practices has a secondary benefit in that the procedures and information contained in them can easily become a source for conducting both classroom and hands-on training. The appropriateness of using the practices in training programs depends on the level of detail contained within the practices. One approach is to detail the training material and make the practices a summary of that material. In this case, workers can use the practice to refresh their memory in key areas, referring to more detailed training material as needed. Another approach is to make the practices detailed enough to serve as stand-alone training documentation. In either case, practices that become an integral part of an agency's training program can avoid a duplication of effort and the potential for inconsistencies between training instructions and actual shop-floor expectations. As with all training materials, written practices must be made easily available to all maintenance employees.

PART 7: REGULATORY COMPLIANCE

Overview

Many federal, state, and local regulations apply to transit bus maintenance. These regulations are extensive, vary by jurisdiction, and directly affect the repair and inspection of

[4] Venezia, F.W., *TCRP Synthesis 54: Maintenance Productivity Practices,* Transportation Research Board, Washington, DC, 2004.

[5] Venezia, F.W., *TCRP Synthesis 54: Maintenance Productivity Practices,* Transportation Research Board, Washington, DC, 2004.

[6] Schiavone, J.J., *TCRP Synthesis 22: Monitoring Bus Maintenance Performance,* Transportation Research Board, Washington, DC, 1997.

buses and maintenance facilities and the health and safety of employees. It is the agency's responsibility to understand and comply with applicable regulations when developing maintenance practices. Failure to comply can result in fines and penalties.

This section provides a broad overview of applicable regulations and offers recommendations to help agencies develop practices that promote compliance. Because the regulations are extensive and vary between local jurisdictions, this section cannot possibly address all of them. Consult with the agency's attorney and/or safety officer, if available, to make certain that your practices are consistent with all applicable requirements. If legal or safety assistance is not available, a contact list of major regulatory agencies is provided at the end of this section to help you get the needed information.

FTA PROGRAMS AND REQUIREMENTS

Triennial Review

FTA conducts a comprehensive audit called a Triennial Review every 3 years for all FTA grantees. An audit team from FTA inspects buses, facilities, and related maintenance records to verify compliance. Affected agencies are required to provide material from major departments, such as finance, purchasing, human resources, operations, and maintenance. The material below highlights some of the Triennial Review requirements that could be satisfied by having documented maintenance practices.

As part of its review, FTA requires each agency's maintenance department to have a written maintenance plan for all buses and facilities and to keep records in hard-copy or electronic format to document that the plan is being followed. For example, if an agency's program calls for PMIs to be performed at 6,000-mile intervals, work orders or other documents must substantiate that the PMIs were performed as specified. Additionally, since FTA requires maintenance plans to be current, agencies need to prove that PMI checklists and other practices reflect the manufacturer's requirements for new vehicles added to the fleet. FTA's Triennial Audit Team looks closely at all agency procedures and documentation, and failure to comply could range from a simple notice for an infraction to citations, fines, or loss of FTA funding.

> Suggestion: Develop individual practices for PMIs and repair tasks because they are essential for complying with FTA Triennial Review requirements in that they provide documentation showing that a maintenance program exists and is being followed for specific buses and equipment.

Model Transit Bus Safety and Security Program

Following the terrorist attacks of September 11, 2001, FTA promulgated regulations under the Model Transit Bus Safety and Security Program requiring agencies to enhance security at transit centers and operating facilities. When the threat status is elevated to an "Orange" or "Red" level, for example, FTA requires agencies to "lock down" their facility by having full perimeter fencing, and gates and the ability to check each person and vehicle entering.

The Model Transit Bus Safety and Security Program also recognizes that proper maintenance of vehicles is critical to the safe operation of a transit system and requires agencies to establish vehicle maintenance practices to regularly address safety-related vehicle equipment, including:

- Service and parking brakes;
- Tires, wheels, and rims;
- Steering mechanism;
- Vehicle suspension;
- Mirrors;
- Lighting and reflectors; and
- Wheelchair lifts.

> Suggestion: Develop a practice with instructions for responding to elevated threat levels. The practice should include procedures for contacting key maintenance employees with a listing of those responsible for securing facilities, staffing points of entry, and coordinating with law enforcement officials. In addition, develop safety-related equipment practices that are consistent with FTA's Model Transit Bus Safety and Security Program requirements. The FTA website listed at the end of this section contains current information needed to address these requirements.

FEDERAL REQUIREMENTS

The federal regulations summarized below address bus manufacturing, maintenance, facilities, human safety, and environmental protection.

THE UNITED STATES DEPARTMENT OF TRANSPORTATION (USDOT)

Code of Federal Regulations (CFR)

USDOT regulates many facets of transportation. The material below summarizes regulations contained under the CFR as published in the Federal Register. Agencies are urged to become familiar with, and have access to, these regulations when developing practices. Contact information is provided at the end of this section.

CFR—Best Practices Requirements

CFR 49 Part 393 pertains to bus construction and manufacturing and affects practices regarding bus specifications and equipment. Some of the areas covered by Part 393 include requirements for bus batteries and wiring, lighting, brake systems, windshield wipers and washers, exhaust systems, heaters and defrosters, driveshaft protection, tires,

horns, mirrors, floors, and other safety-related equipment. In addition to being an essential resource when developing bus specifications, Part 393 is also useful when writing bus inspection practices because it includes specific instructions for checking lighting, braking systems, brake hoses, exhaust systems, door width and height, mirrors, and other bus equipment. Affected equipment has a specific requirement that the inspector must verify when performing PMIs.

Suggestion: Use CFR 49 Part 393 as a guide when developing practices because it provides proper inspection criteria for specific bus equipment and contains information on developing inspection forms.

CFR—Record-Keeping Requirements

CFR 49 Part 396 outlines PMI record-keeping requirements. It also establishes pre-trip inspection requirements and provides essential guidance for developing maintenance practices and training programs.

Under Part 396, records must substantiate that the mechanic or inspector carrying out the PMI has proper training, knowledge, and experience to perform the required tasks. In addition, all inspections must be documented to show that identified defects have been repaired.

Suggestion: Use Part 396 as guide when developing PMIs because it includes record-keeping requirements, inspection criteria, and inspection frequency details. It also identifies the safety items that must be inspected.

Federal Motor Vehicle Safety Standards (FMVSS)

FMVSS are safety standards that all vehicle manufacturers must comply with. Although initial compliance with FMVSS is the responsibility of the bus OEM, agencies must have an understanding of these requirements to make certain that the requirements are not violated during maintenance and repair activities. In particular, agencies must ensure that the replacement of any FMVSS-certified part or component continues to meet original certification criteria.

Suggestion: Refer to FMVSS when developing practices to make certain that all after-market parts and components used in repairs continue to meet safety requirements. Maintenance personnel are not allowed to substitute or compromise any system or component with noncertified parts. An understanding of FMVSS also allows you to develop in-plant inspection practices for new buses to verify that these important safety requirements are being met by the OEMs.

ENVIRONMENTAL PROTECTION AGENCY (EPA)

Several EPA regulations are intended to protect human health and safeguard the natural environment. Typical bus maintenance operations have two sources of air pollutants: mobile (i.e., vehicles) and stationary (i.e., facilities).

Vehicles

It is the OEM's responsibility to certify that vehicles comply with all EPA exhaust emissions regulations applicable at the date of manufacture. In some jurisdictions, however, separate state and local regulations may also apply. For example, some localities require opacity tests or other verification that the engine continues to function within the compliance criteria. Due to the various requirements, agencies are urged to contact their local EPA office to determine which requirements apply to their operation and to make certain that their practices comply.

Suggestion: PMI programs should incorporate verification that all emissions-related equipment is operating according to the vehicle OEM's specifications. Under no circumstances should a maintenance practice modify or render any emissions equipment inoperative.

Facilities

Clean Water Act

The Clean Water Act (CWA) provides the national framework for water pollution control and water quality management. Maintenance facilities and fleet operations generate wastewater from a variety of sources and activities such as steam cleaning, vehicle and facility washing, and water runoff into drains from vehicle parking areas, refueling, and maintenance repair areas.

Suggestion: Become familiar with all CWA requirements summarized below and develop practices that are consistent with them.

Underground Storage Tanks. The CWA requires that all underground storage tanks (USTs) be registered with the local environmental agency, health agency, or fire department. Requirements for USTs include double-walled construction for underground tanks and piping. Regulations also require the tank owner (i.e., transit agency) to have certified tank testers perform periodic tests on all USTs and piping and to document the test results. Tank owners must also monitor for leaks by using leak-detection equipment and product inventory reconciling. Failure to comply can result in citations, facility closure, or permit revocation.

Storm Water Runoff. The CWA regulates contaminants that become part of storm water runoff as the storm water washes over the facility grounds. Contaminants include hydrocarbons from fuel and oil, battery acid, dirt, trash, grease, antifreeze, and other substances that mingle with storm water. Each contaminant has specific thresholds that

typically require periodic sampling. Since each jurisdiction has different requirements, agencies are urged to check with their local water resources authority or environmental/health agency. Some jurisdictions, for example, require agencies to take storm water samples from the runoff within the first half-hour of a storm that exceeds one-quarter inch of rainfall. With few exceptions, agencies are required to inspect their facilities for possible contaminants on a scheduled basis and to document the findings.

Sewer Systems. Maintenance operations generate sludge and contaminated water from their bus-washing activities, and the sludge and contaminated water eventually enter the city sewer system. Separators are typically required to trap unacceptable hazardous materials on site. Agencies must also have the separated sludge and oils pumped, sampled, and disposed of in compliance with EPA and local regulations.

Clean Air Act

The EPA's Clean Air Act (CAA) addresses conventional air pollutants (i.e., those that are naturally part of the environment) and regulated air pollutants (i.e., manufactured pollutants). The CAA affects maintenance facility operations and is typically regulated by local authorities. Local regulations are sometimes more restrictive than the CAA requirements and often require permits.

Fueling Facilities. Fueling facilities that dispense diesel, gasoline, and alternate fuels are typically regulated to prevent spillage and hydrocarbon or methane vapors from entering the atmosphere.

> Suggestion: Develop practices for preventing leakage and spillage. Include procedures for using and maintaining pumping systems, hoses, nozzles, and related dispensing equipment. Also develop cleanup procedure practices for spills.

Auxiliary Generators. Many agencies have a back-up generator to support normal operations during an electrical power outage. The manufacturer requires that these units receive periodic exercising, load testing, and PMIs. Some jurisdictions also require permits and the monitoring of exhaust emissions from auxiliary generators.

> Suggestion: Develop a PMI practice with scheduled intervals for generators. Include instructions for load testing and keeping equipment in good running order according to the OEM's recommendations.

Refrigerant Use. The CAA regulates the refrigerant used in air conditioning (AC) systems for vehicles and buildings. It requires that the refrigerant removed from any AC system be captured and recycled using a certified recovery system and be operated by a licensed employee. The refrigerant (including 134a) added to any AC system must be tracked and inventoried to substantiate that no product was intentionally vented into the atmosphere.

> Suggestion: Practices involving refrigerant-based AC systems should include procedures for logging refrigerant use and verification that certified equipment is operating properly and employees have proper licensing.

Paint and Body Repair. Paint and body repairs generate several emissions regulated by the CAA. The most common are volatile organic compounds (VOCs) contained in most paints. Many jurisdictions also require VOC users to track the paint usage and the type of paint coatings applied. These requirements may exceed federal CAA requirements. Agencies that use large quantities of paint are typically required by the CAA to use certified paint booths that include various VOC emission-reduction equipment.

Body repairs also generate dust and particulate matter (PM), also regulated under the CAA as a hazard to humans. Agencies are required to have proper breathing apparatuses and ventilation for employees who sand or paint vehicles.

> Suggestion: Check with your local health agency for regulations governing use of paints and thinners, and develop practices that include a process for maintaining paint logs, using personal protective equipment, and keeping the equipment in good working order. The type of spray gun used for painting can significantly reduce VOC emissions.

Pollution Prevention Act of 1990

The Pollution Prevention Act of 1990 (P2) is also regulated by the EPA and is intended to control waste by keeping harmful products from migrating into the food chain and from contaminating humans. Since most maintenance facilities generate hazardous waste, P2 applies to these facilities as well. An important element of this regulation is that it requires agencies to have a documented hazardous communications program in place that includes:

- A current materials safety data sheet (MSDS), which must be updated as new products are purchased, for each hazardous chemical in the workplace;
- Labels and other forms of warning graphics on all chemical containers used in the workplace;
- Warning signs posted in conspicuous locations; and
- Documented employee training programs regarding the use, handling, and management of hazardous chemicals.

The P2 program makes certain that employees are informed of hazardous products and receive documented training in proper use and disposal. (See the section on OSHA below, which also regulates personnel safety while performing work tasks.) Facility and worker safety

practices affected by P2 include disposal of waste oil and filters, antifreeze, parts-cleaning fluid, batteries, refrigerants, paint thinners, and flammables. Exhaust emissions are not part of P2; they were covered under the CAA described above.

Suggestion: Develop practices to comply with P2 requirements by including procedures for reviewing MSDSs and identifying affected products deemed unacceptable for use in your shop. Become familiar with local requirements, which differ by jurisdiction. Some areas, for example, ban chlorinated solvents, while others simply restrict quantities. Agencies should also consider the use of organic alternatives to hazardous products. Local health agencies are the best place to begin obtaining information on acceptable products and chemicals.

Certifications and Licenses

Air Conditioning Repairs

The EPA requires that all technicians working on AC systems be certified and use personal protection equipment (PPE).

Brake Repairs

Air brake system repairs are regulated under CFR 49 Parts 393/396 and FMVSS, which require technician certification to repair and maintain these brake systems. Use of PPE is recommended.

Suggestion: For AC and air brake practices, include information alerting workers that certification is required. Also provide instructions for PPE use.

AMERICANS WITH DISABILITIES ACT (ADA)

Buses

Regulations promulgated under the Americans with Disabilities Act (ADA) affect buses by way of construction, equipment, and operational requirements. ADA mandates that all newly constructed transit buses have wheelchair access in the form of a lift or ramp. The ADA sets minimum width and height requirements for the door at the wheelchair entry and specifies how wheelchairs must be secured on the bus. The ADA also establishes requirements for either the driver to announce bus stops or the bus to be equipped with an automated bus stop annunciation system. Labels and signs that notify passengers to render their seats to persons with disabilities are also part of the ADA.

Suggestion: Develop PMI practices that include procedures to verify that all ADA-mandated systems are functioning properly and include a means for the driver to notify maintenance of any malfunctioning equipment.

Facilities

ADA requirements for facilities set specific standards to accommodate persons with disabilities. These requirements are regulated by local building codes and federal law. All public facilities must comply with the ADA, which includes requirements for wheelchair ramps, restroom facilities, fire alarms, elevators, parking, and other facility areas.

Suggestion: When developing facility PMI practices, be sure to include inspection and repair of ADA equipment as part of your facility maintenance program. For example, fire alarm systems and emergency evacuation plans need to be periodically tested. All tests and drills must be supervised by a designated safety person and documented.

OCCUPATIONAL SAFETY AND HEALTH ADMINISTRATION (OSHA)

Overview

The Occupational Safety and Health Administration (OSHA) is the national mechanism to ensure safe and healthful workplace conditions, created by the Occupational Safety and Health Act of 1970. Individual states may choose to adopt different standards for workers in their jurisdiction. These standards will meet the approval of OSHA as long as they are as stringent as the federal requirements. OSHA regulations cover a broad range of hazards and include procedures for chemicals, containers, and container labels; equipment; industrial accidents/injuries; and training. OSHA also covers personal protective equipment (PPE), such as respirators, hearing protection, gloves, and safety goggles for employees working in areas with specific hazards; use of shop equipment; work done in confined spaces; and operating forklifts.

Agencies need to understand that there are no "OSHA-exempt" states. So-called "OSHA states" have an OSHA-approved plan, while "non-OSHA states" have industrial safety rules and regulations that, while not formally approved by OSHA, nevertheless pertain to maintenance operations. States with OSHA-approved plans receive federal funding for up to 50 percent of the cost of enforcing their employee safety program. Additional information on OSHA is available through the contact information shown at the end of this section.

States and territories with OSHA-approved plans include Alaska, Arizona, California, Connecticut, Hawaii, Indiana, Iowa, Kentucky, Maryland, Michigan, Minnesota, Nevada, New Jersey, New Mexico, New York, North Carolina, Oregon, Puerto Rico, South Carolina, Tennessee, Utah, Vermont, Virgin Islands, Virginia, Washington, and Wyoming. In these states, the employee safety plan meets or exceeds all OSHA requirements and standards and must continue to do so to continue to receive funding. State or

OSHA inspectors may inspect at any time, and if violations are found, fines or prosecution may result.

States and territories without an OSHA-approved plan include Alabama, Arkansas, Colorado, Delaware, Florida, Georgia, Guam, Idaho, Illinois, Kansas, Louisiana, Maine, Massachusetts, Mississippi, Missouri, Montana, Nebraska, New Hampshire, North Dakota, Ohio, Oklahoma, Pennsylvania, Rhode Island, South Dakota, Texas, West Virginia, and Wisconsin. Each of these states, however, has rules and regulations for workers. Management in these states must ensure that its maintenance operations fully comply with all applicable regulations. Penalties for noncompliance vary from state to state and include fines and possible criminal penalties. Contact the labor or employment section of your particular state government for complete information on employee safety requirements.

Since these requirements are extensive and complex and vary by state, agencies are urged to use the OSHA contact information shown at the end of this section to determine which requirements apply to their particular operation.

Facility Safety

Safety is a major concern in and around bus maintenance facilities. While facilities are under construction, the contractor and local buildings and safety inspectors are responsible for meeting OSHA or other industrial/commercial safety requirements. It becomes the transit agency's responsible to comply with those requirements once the facility is occupied. In general, most facilities fall under the following mandatory requirements that affect transit agencies:

- **Combustible liquids,** such as battery electrolyte, fuels, petroleum solvents, welding gas, and heating oils. They are also regulated by the local fire marshal.

Suggestion: Develop practices that include procedures for handling and disposing of combustible liquids and include appropriate requirements for PPE (e.g., gloves and eye protection equipment).

- **USTs.** Entry into these tanks for repair and maintenance are regulated as a "confined space entry" regardless of the products stored in the tanks.

Suggestion: Develop practices that include procedures that specify the safety requirements for persons entering a confined space. Employees must have proper breathing and harness apparatuses, and a second person must be present as a "tender" to remove the first person from the tank and call for assistance if the first person should encounter breathing problems.

- **Work requirements.** When personnel are working on or with USTs and the substances contained therein, OSHA requires that a best practice document be developed that includes detailed operating instructions for system piping, valves, gauges, and pumps.

Suggestion: Develop a practice that satisfies OSHA's best practice requirement. Include procedures to initiate an emergency shutdown due to a leak alarm or system malfunction. Also include requirements for PPE and procedures for training personnel on the use and repair of this equipment.

- **Compressed gas storage.** Tanks that hold products such as compressed natural gas (CNG), automotive propane, oxygen, and acetylene are regulated by OSHA. The local fire marshal also has jurisdiction.

Suggestion: Develop practices to ensure that portable tanks—such as oxygen, acetylene, and propane tanks—are secured (i.e., chained to a wall or post or on a proper cart) to prevent falling over and damaging the shutoff valve and causing serious danger.

- **Right to know.** OSHA has very explicit regulations governing employees' "right to know." As a result, agencies are required to inform employees and make available to them all information about hazardous chemicals stored in the workplace. MSDSs are the most basic information source to use for this purpose. Federal law requires that chemical manufacturers produce and distribute Federally compliant MSDSs for each hazardous chemical that the manufacturers sell. OSHA requires that current MSDSs be available for each hazardous chemical and that employee training on this subject be documented. Information provided on the MSDSs typically includes the:
  - Chemical identity and common name;
  - Physical and chemical characteristics;
  - Physical hazards and health hazards, including exposure symptoms; and
  - First aid measures for hazardous exposure.

Suggestion: Develop a practice for collecting or producing MSDSs and include procedures for periodic (e.g., monthly) inspections of all MSDSs information and taking inventory of all chemicals on the agency's property by a qualified person. Include the practice as part of the MSDSs training documentation.

Personal Safety

This section reviews requirements for employees' personal safety and includes the use of PPE such as eye protection equipment, gloves, aprons, faces shields, and ear and breathing protection equipment. Use of PPE is based on established thresholds for personnel exposure to dust, PM, noise, chemicals, vapors, and other harmful conditions and may be more stringent than most agencies expect. For example, eye protection equipment and face shields are required when operating shop equipment or hand tools. Head protection equipment is also required when working under a vehicle. OSHA also requires that personnel exercise caution when performing steam-cleaning operations and when using

caustic chemicals. Personnel must be provided with a written program (i.e., practice) that includes proper procedures for machinery disconnects and notifications to ensure that no mechanical components are activated inadvertently. Additionally, posted signs requiring PPE must be visible to all employees using certain machinery and equipment. Appropriate PPE also must be available close to hazardous equipment or procedures.

In addition, some chemicals or substances used in the workplace require that employees' health be monitored on a regular basis for exposure to toxins. Some agencies are large enough to have their own medical staff for physicals and drug testing, while others use contracted companies.

Medical monitoring is most frequently done for those exposed to dust hazards such as grinding, cutting, and blasting work. The National Institute for Occupational Safety and Health (NIOSH), which is part of the Centers for Disease Control (CDC), provides information on medical monitoring. Use the contact list at the end of this section to obtain additional information.

> Suggestion: Develop practices incorporating all relevant OSHA and EPA requirements and include instructions to verify that all safety equipment is available and in good working order. Also document safety-related inspections required by OSHA and have these files available for audit purposes.

The vast majority of OSHA requirements are commonsense safety precautions that can sometimes be overlooked in maintenance shops. A proper approach to safety is one where practices include procedures that:

- Eliminate slip and trip hazards;
- Eliminate hazards from frayed electrical cords and damaged high-pressure hoses;
- Ensure access to all emergency equipment, such as fire extinguishers, electrical panels, eye wash stations, and first aid kits; and
- Include safety instructions describing proper labeling, maintenance, and operation for fueling equipment, hoists, steam cleaners, and pits.

STATE AND LOCAL REQUIREMENTS

As mentioned above, many states have established their own programs to comply with federal regulations. Use the contacts provided at the end of this section to obtain additional information; also contact your local health, labor, and safety departments.

OSHA AND THE EPA

Many states and urban areas have OSHA and EPA agencies to enforce federal laws at the local level. Below are some specific areas where local jurisdictions often monitor federal requirements:

- Forklift training certification,
- Confined space entry training,
- AC system maintenance and technician training, and
- Air brake maintenance and technician training.

Most state and local agencies interpret federal law and enforce accordingly. As mentioned above, some state and local requirements are more stringent than those established at the federal level.

Department of Transportation

Each state has local motor vehicle regulations that are regulated by the state's own department of transportation (DOT) or department of motor vehicles (DMV). Agencies need to understand these regulations because these regulations apply to many facets of vehicle operation, maintenance, repair, and inspection. For example, DOT and DMV regulations clearly specify the type of license required to operate a transit bus in revenue or nonrevenue service and the level of maintenance required for specific equipment. These agencies also establish requirements for braking performance, axle weights, and pre-trip inspections.

Local Health and Environmental Agencies

Local health and environmental agencies typically regulate such issues as sewer systems, storm water and drainage systems, worker health, and hazardous materials management. Practices worth developing spell out procedures for local permit compliance and renewal, such as practices for preparing and collecting MSDSs and describing how employees can access them and practices for conducting periodic safety inspections, including the timeframe (e.g., monthly or quarterly) and person(s) responsible for ensuring compliance.

In addition, if a facility is ever used for procedures involving certain toxic chemicals or substances, such as lead (i.e., as in paint, piping, or fuels) and asbestos (i.e., as in brake linings or fire-resistant coverings), or has stored or used these items in construction, monitoring the air quality in the facility on a regular basis may be required. Employees working at the facility may also be required to continue medical monitoring of their health for exposure to these toxins. Practices that detail monitoring requirements are certainly worth developing.

Uniform Building Codes

Inspections

Facilities, depending on their age and function, need to comply with uniform building codes (UBCs) and National

Fire Protection Association (NFPA) requirements applicable at the time of construction or modification. Compliance with these requirements is your agency's responsibility. A practice that incorporates proper maintenance and inspection procedures for all facilities will help ensure compliance. Keep in mind that any modifications made to structures covered by the UBC or NFPA requirements must comply with current codes and must be permitted and properly inspected if modified or rehabilitated.

Fire Marshal

The local fire marshal typically has authority for inspecting all buildings and equipment to verify compliance with state and local fire codes. Inspections typically include storage of flammable materials, fire alarms and safety systems, extinguishers, and sprinklers. Maintenance and inspection practices should include procedures for all fire and life safety items and for flammables and combustibles. The procedures should document compliance with these codes. Inspection documents must be on file and readily available for audits.

COMPLIANCE CHECKLIST

The following is a checklist of important federal, state, and local regulatory organizations that promulgate regulations that typically affect bus maintenance. Agencies are urged to use the contact information provided below to become more familiar with these organizations and their requirements.

- Federal
  - CFR 49 Parts 393 and 396
  - EPA
  - OSHA
  - FTA (if your agency is a grantee of federal funds)
- State
  - DOT
  - EPA
  - OSHA
  - UBC and NFPA
- Local
  - Fire marshal
  - Building inspector
  - Environmental agency (and local air district if applicable)

COMPLIANCE MONITORING

Regulatory agencies have several ways of monitoring compliance, including site visits and inspections. If inspectors from one government agency see a violation that is outside their jurisdiction, they typically notify other regulating agencies. Inspectors also monitor compliance via reports submitted from accidents or injuries, emission citations triggered by smoking buses, and public complaints made by employees and neighbors.

Consequences of noncompliance range from a minor infraction, with a notice to correct without imposing penalties, to large fines. In some cases sanctions include withholding federal or state funds and/or criminal charges if your agency is found to be negligent and causing injury, death, or excessive harm to the environment.

CONTACT LIST

USDOT

Mail:
400 7th Street, SW
Washington, DC 20590

Telephone:
202-366-4000

Internet:
www.dot.gov/contact.html
For CFR requirements go to www.archives.gov/federal_register/index.html

Mail:
To order CFR documents write to:
Superintendent of Documents
P.O. Box 371954
Pittsburgh, PA 15250-7954

Telephone:
202-512-1800

FMVSS

Mail:
400 7th Street, SW, Room 6124
Washington, DC 20590

Telephone:
888-327-4263
202-366-2746

Internet:
www.nhtsa.gov/

EPA

Mail:
Ariel Rios Building
1200 Pennsylvania Ave, NW
Washington, DC 20460

Telephone:
800-490-9198
202-272-0167

Internet:
www.epa.gov/

OSHA

Mail:
200 Constitution Ave, NW
Washington, DC 20210

Telephone:
866-487-2365
800-321-6742

Internet:
www.osha.gov/

FTA (Also See USDOT)

Mail:
400 7th Street, SW
Washington, DC 20590

Telephone:
202-366-4000

Internet:
www.fta.dot.gov/

CDC

Mail:
1600 Clifton Road
Atlanta, GA 30333

Telephone:
404-639-3311

Internet:
www.cdc.gov/niosh/topics/ords/WorkerMedicalMonitoring.html

CHAPTER 3

IMPROVING WRITING SKILLS AND USING GRAPHICS

OVERVIEW

Writing well and inserting photographs can be difficult, especially for maintenance personnel who are not especially trained for it. This chapter provides some basic instructions to help you improve those skills. Chapter 6 includes sample practices that were developed by applying the information provided here.

WRITING EFFECTIVELY

Poorly written text with grammatical and spelling errors can easily confuse readers, causing them to make mistakes, work slowly, or re-do the work as they try to make sense of the instructions. Below are some simple suggestions to help you write more effectively and improve the material synthesized from other sources.

The Five "Cs" for Good Writing

When writing practices, you should strive to be:

- **Consistent:** follow a pattern and always use the same word for the same topic.
- **Complete:** include all the information that readers need.
- **Clear:** write so that readers can understand you; use common words and write the way you talk.
- **Concise:** be brief; write short sentences and omit any unnecessary words.
- **Correct:** provide up-to-date, correct information; use correct spelling, punctuation, and grammar.

To be consistent:

- Write instructions as commands, using verbs: Turn . . . Unscrew. . . Tighten . . . Lubricate. . . A consistent pattern of commands is easy for readers to follow.
- Always use the same term for specific pieces of equipment or processes.

To be complete:

- After writing the instructions, follow them yourself and note where information is missing or incorrect. Rewrite the text as needed.
- Have a worker or supervisor follow your instructions. Note where he or she is confused or where information is missing or incorrect. Rewrite the text.

To be clear:

- Write the way you talk. You can always go back and clean up the grammar later.
- Use common but exact words.
- Use bullets or numbers to list the steps in a process, replacement parts, etc.

To be concise:

- Write in short sentences and paragraphs.
- Omit any unnecessary words.

To be correct:

- Have clerical staff or other knowledgeable persons proofread your writing for spelling and grammatical errors. Make the corrections.
- Keep a pocket dictionary handy and use it.
- Use the thesaurus feature in word processing software to help you find the right word. In MS Word, from the "Tools" menu, select "Language" then "Thesaurus."
- Use the spelling and grammar check feature in MS Word. From the "Tools" menu, select "Spelling and Grammar." (Note: While the spelling and grammar check is useful, it is not perfect. It may not catch words that are spelled correctly but used incorrectly. For example, "their is no weigh spell Czech wood cache these errs!")

Figure 3-1 provides an example of how to be consistent, complete, clear, concise, and correct when writing.

Tips for Improving Existing Text

If you use text from another source, do not assume that it is well written. Evaluate the text against the five "Cs" for

Be **consistent**, **complete**, **clear**, **concise**, and **correct**.

Example of well written instructions:
Step 1. Rotate the lever counterclockwise one full turn.
Step 2. Lock the lever into position.
Step 3. Close the assembly.

CONSISTENT

Definition:
Always use the same word for the same thing. Use the same sentence structure/pattern for step-by-step instructions.

Poor example:
Step 1. Rotate the lever counterclockwise one full turn.
Step 2. The lever position should be double-checked before closing the assembly.
[Explanation: Because step 2 is not written as a command, like step 1, it is unclear who should double-check the lever position.]

Better example:
Step 1. Rotate the lever counterclockwise one full turn.
Step 2. Lock the lever into position before closing the assembly.

Better yet:
Step 1. Rotate the lever counterclockwise one full turn.
Step 2. Lock the lever into position.
Step 3. Close the assembly.

COMPLETE

Definition:
Include all information readers need.

Poor example:
Step 1. Rotate the lever one full turn.
Step 2. Close the assembly.
[Explanation: A step is missing.]

Good example:
Step 1. Rotate the lever counterclockwise one full turn.
Step 2. Lock the lever into position.
Step 3. Close the assembly.

CLEAR

Definition:
Write so readers can understand you.

Poor example:
Rotate the lever to the left one full turn.
[Explanation: Readers may be confused about which direction is "left."]

Good example:
Rotate the lever counterclockwise one full turn.

CONCISE

Definition:
Be brief. Write only as much information as readers need.

Poor example:
Grab the lever and turn it counterclockwise until it has made one complete turn and the lever is back in its original position.
[Explanation: The reader doesn't need all these words.]

Good example:
Rotate the lever counterclockwise one full turn.

CORRECT

Definition:
Be exact. Make no mistakes in information you provide. Use correct spelling and grammar.

Poor example:
Rotate the lever clockwise one full tern.
[Explanation: This is incorrect information, and "turn" is misspelled.]

Good example:
Rotate the lever counterclockwise one full turn.

Figure 3-1. The five "Cs" for good writing.

good writing and improve the text where needed. Most of all, edit for consistency, completeness, and correctness.

- Make sure the text always uses the same term for the same thing or concept. Revise step-by-step instructions so they follow the same sentence structure (preferably one that starts with a command).
- Make sure no information is missing.
- Make sure the information is correct for your shop.

Writing Resources

Online

The following resources are available online to assist with spelling, grammar, and punctuation:

- Purdue University's Online Writing Lab (OWL) at http://owl.english.purdue.edu/handouts/grammar/index.html

provides clear, straightforward instructions for correct grammar, spelling, and punctuation.
- Get It Write Tips at www.getitwriteonline.com/archive/tips.htm provides an archive of grammar tips provided by a private writing consultant.
- Study Guides and Strategies at www.studygs.net/spelling.htm provides basic spelling rules, including a list of commonly misspelled words, and links to online dictionaries.

Books

Ask an associate at your local library or bookstore for books that provide brief, basic advice for writing effectively.

USING PHOTOGRAPHS AND GRAPHICS

Overview

This section describes how to add photographs and graphics (referred to here as "pictures") to your maintenance practices. The information assumes that a computer will be used. Those without a computer will need to take photocopies of pictures and paste them into the document. This section also assumes that MS Word will be used, although other word processing software programs have similar capabilities. Different versions of Word may handle pictures in slightly different ways from those described here. Remember to read the Legal Considerations section of Chapter 2 and Appendix A before using pictures other than your own.

Like so many computer applications, adding pictures will take some getting used to for those trying it for the first time. While this section is by no means a definitive guide, it contains enough information to get you started. You will need to experiment with pictures and possibly seek additional guidance from other sources or people more familiar with the process. For those using the Word template, space is provided to insert pictures next to each job instruction where appropriate.

Basic rules of thumb are as follows:

- Review the information provided in Table 3-1.
- Manipulate photos (e.g., crop and adjust the file size) *before* inserting them into the practice.
- Insert pictures into your Word file *after* you have finished writing the text.
- If you are going to print your maintenance practices, use pictures with high enough resolution to print clearly.
- Be prepared to experiment. Funny things can happen with pictures in electronic documents.
- Use manuals with pictures that you find to be particularly helpful as a template for your own work.

To use pictures effectively:

- Use pictures to help readers understand the text or perform an instruction correctly.
- Use pictures only when necessary. Not every step in the practice, especially basic ones such as "open engine access doors," require pictures. Pictures for such basic steps will only clutter the practice.
- Use pictures that exactly depict your maintenance situation or equipment.
- Place pictures close to the corresponding text description. (Note: the Word template will do this for you).
- Add arrows and labels to point out a specific piece of equipment or procedure shown in the picture.
- Trim (i.e., crop) photos to focus on a specific piece of equipment or procedure.
- Use color images only if color makes the image clearer.
- Do not use unfocused or confusing pictures.

Acquiring Electronic Picture Files

Obtain pictures from the Internet or from reference material only if you are sure you are not infringing on a copyright. (See Chapter 2, Part 1, and Appendix A, Legal Considerations.)

To download pictures from the Internet:

1. Right click on the image.
2. Select "Save Image As."
3. Give the file a meaningful name; retain the file extension (e.g., jpg).
4. Browse the directories on your computer for the correct directory in which to save the file; click "Save."

Storing Files

To develop and follow a system for naming and storing pictures on your computer:

- Give files meaningful names; include the extension. For example: insert_brake_pads_10 x 12mm.jpg.
- Store all picture files in one directory, or store all pictures for a specific maintenance practice in a directory with the appropriate Word file.

Inserting Pictures into a Word File

To insert pictures into a Word file:

1. Click on where you want to insert the picture.
2. From the toolbar, go to "Insert," then "Picture," then "From File."
3. Locate the picture you want to insert. (Browse your directories.)
4. Double-click the picture you want to insert.

TABLE 3-1 Making sense of picture jargon

Term	Definition	Why It's Important
Picture file type	File type, or format, is determined by the way information is stored in a file. File type is indicated by the file name extension (e.g., .tif).	You can insert the following picture file types into Word documents: • Graphics Interchange Format (.gif) (usually low-resolution; small file size) • Joint Photographic Experts Group (.jpg) (usually low-resolution; small file size) • Tagged Image File Format (.tif or .tiff) (usually high-resolution; large file size) • Microsoft Windows Bitmap (.bmp) • Windows Metafile Graphics (.wmf) • Encapsulated PostScript (.eps) (usually high-resolution; medium file size) • Portable Network Graphics (.png) • Enhanced Metafile (.emf)
Raster picture	A raster picture is made from thousands of tiny dots. Scanned pictures and .bmp and .tif files are raster.	When enlarged in a Word document, raster pictures become less sharp, and the dots that make up the picture may become visible.
Vector picture	A vector, or drawn, picture is made from lines, curves, rectangles, and other objects. Word AutoShapes and .eps and .wmf files are vector files.	When enlarged in a Word document, vector pictures retain their sharpness.
File size	Electronic file size is expressed in terms of kilobytes (kb). ("Size" here doesn't refer to dimensions. It refers to how much space it takes up on your computer.)	Inserting pictures into Word files increases the Word file size. The program may react more slowly and print time may increase.
Picture resolution	Resolution is the quality of a picture in terms of the number of dots or pixels that make up the picture. Resolution of electronic photo files is expressed as pixels per inch (ppi).	A picture's resolution affects two things: • Its size (e.g., 300 ppi = 1,373 kb; 72 ppi = 82 kb). Inserting high-resolution pictures will greatly increase the size of a Word file. • Its print quality. Minimum picture resolution for sharp printing is generally about 200 ppi. With picture resolution, you have to find a balance between file size and print quality. Files of type .jpg and .gif are typically 72 ppi and may not print sharply. Exception: A low-resolution picture with large dimensions (e.g., 23 × 12 inches). Reducing the picture's dimensions in Word improves its sharpness.
Embedded picture	When you embed a picture, a copy of it becomes part of the Word file. (Embedding is MS Word's default treatment for pictures.)	Embedded pictures increase Word file size. Still, if you plan to share Word maintenance practices or upload them to the TRB Web Board, you must embed the pictures.
Linked picture	When you link a picture (instead of embedding it), the picture does not become part of the Word document.	Linking pictures helps keep the size of your Word file small. However, copies of the Word file that you share with someone or upload to the TRB Web Board will not include the linked pictures.

Moving Pictures Around on the Page

To move pictures around on the page:

1. Click on the picture and hold. (The cursor will become a four-directional arrow.)
2. Drag the image to the correct location and release.
3. If the image will not move, or if it will not stay in the correct location, try the troubleshooting remedies at the end of this section.

Enlarging or Reducing Picture Dimensions

To enlarge or reduce picture dimensions:

1. Click on the image to select it.
2. Move the cursor over the "anchor" at any corner of the image; the cursor will become a double arrow.
3. Click on the double arrow and hold; move the cursor to enlarge or reduce the image.

Note: Enlarging pictures in a Word document can make them fuzzy when you print the document. Reducing the dimensions tends to make them sharper.

Cropping Pictures

Sometimes it helps readers if you trim or crop a picture to focus on the most important part of the image. To crop a picture:

1. Double-click on the picture.
2. Select the "Picture" menu.
3. Under "Crop From," type in the width of text to cut from the left, right, top, and/or bottom of the picture.
4. Select "OK."

Deleting Pictures

To delete a picture:

1. Click on the image to select it.
2. Hit the "Delete" key.

Adding Arrows, Circles, and Labels

Help readers get the full value of a picture by using arrows. You can use an arrow on its own if the instructions make it obvious where the arrow is pointing, or add a text box to point from descriptive text (e.g., "add oil here") to an exact reference in a picture (e.g., the oil fill location).

To add an arrow (Figure 3-2):

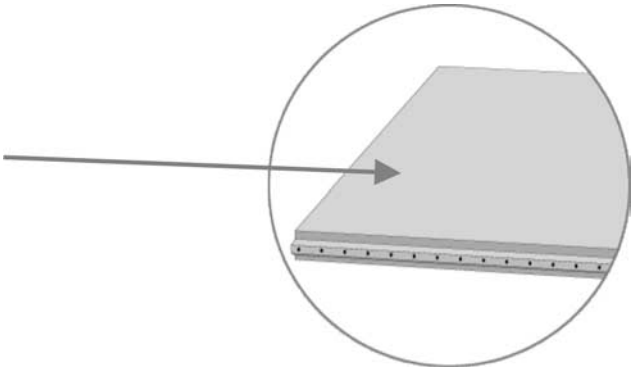

Figure 3-2. Arrow.

1. Go to the "Drawing" toolbar and select the arrow shape.
2. Place the cursor where you want the arrow to begin, drag, and release.
3. Move and resize the arrow as needed.

To add a circle to highlight part of a picture (Figure 3-3):

1. Go to the "Drawing" toolbar and select the circle shape.
2. Place the cursor where you want the circle to begin, drag, and release.
3. Move and resize the circle as needed.
4. You can format the circle in many ways. Go to the "Drawing" toolbar and select the appropriate tool. (The bucket icon allows you to select "fill color" if you want to highlight the circle in color, the paintbrush icon allows you to select "line color," and the column of lines icon allows you to select line heaviness. However, do not use color in your picture if you plan to print in black and white.)

To add a label (i.e., caption) to a picture (Figure 3-4):

1. Go to the "Insert" menu; select "Text Box."
2. Click and hold your curser where you want the label to begin, drag, and release. An empty text box will appear.

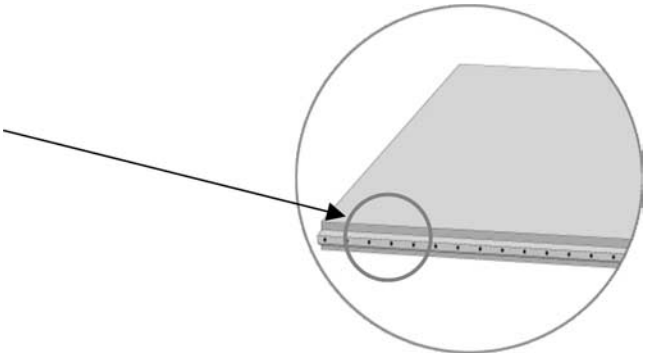

Figure 3-3. Circle.

Figure 3-4. Caption.

3. Type the caption in the text box and add an arrow to it.
4. Move and size the text box as described above.
5. You can format the text box in many ways (e.g., delete the border around the text). To do so, go to "Format" menu, and select "Text Box."

Note: You can move, size, and format "Text Boxes" like "Pictures."

Reducing the Size of Word Files

When you insert pictures, Word automatically embeds these pictures into the file. The picture becomes part of the Word file and increases the file's size, which can slow down your Word document. Below are two options to help reduce file sizes. Also included are instructions for reducing the overall size of documents that contain photos, making it easier to post practices on the Web Board.

Option One

To minimize Word file size, link pictures instead of embedding them:

1. Click where you want to insert the picture.
2. Go to the "Insert" menu, select "Picture," then "From File."
3. Locate the picture you want to insert. (Browse the directories on your computer.)
4. Single-click on the picture.
5. Click the arrow to the right of the "Insert" button, then "Link to File."

Note: If you plan to share your Word files with other agencies, embed pictures; do not link them (see Table 3-1).

Option Two

Reduce photo file sizes (i.e., bytes) *before inserting them in Word.* To do this, you need photo manipulation software like MS Photo Editor, which comes with later versions of Word. With MS Photo Editor, there are two ways to reduce the size of a photo file:

- **Reduce the photo's dimensions (length and width).** Under "Edit/Resize," enter the physical dimensions you want. (For example, the original dimensions may be 12 inches by 8 inches; edit the first dimension to 5 inches, and the other will adjust proportionally.)
- **Reduce the file's resolution (pixels per inch).** Under "File/Properties," enter the desired resolution in pixels per inch (ppi). (For example, the original may be 300 ppi; reduce it to 150.)

Note that reducing the resolution also reduces the print quality. Do not go too low!

Also note that you must reduce the size of photo files *before* you insert them into a Word document. Adjusting photo dimensions *after* you have inserted the photo in Word has no effect on the file size.

Reducing Photo File Size for Web Board Posting

Once you are comfortable with the resolution and file size of the photos contained in your practice, you can compresses the entire practice file using another toolbar feature in Word. Before doing so, however, you should give the file another name to distinguish it from the version you will print for internal agency use (e.g., add "Web Board" or "WB" to end of the file name). To compress a Word document with photos in it, select "View" at the top of the screen, and then "Toolbars."

Select "Picture" and then click on the "Compress Picture Icon," which is the tenth icon from the left in newer Word versions and looks like a box with arrows pointing in from each of its four corners.

Troubleshooting

Pictures in electronic documents can have minds of their own. If you experience problems, double-click the picture and experiment with the settings. To find specific Word troubleshooting tips:

1. Go to the "Help" menu and select "Microsoft Word Help."
2. Type in "Troubleshoot Graphics."
3. Select a topic from the list of possibilities.

Following are some common occurrences.

A Picture Covers (i.e., Goes Over) the Written Text

To force text to wrap around the picture:

1. Double-click on the picture.
2. Select "Layout" from the menu.
3. Select "In line," "Square," or "Tight" (depending on how you want the text to wrap).
4. Select "OK."

A Picture Does Not Move with the Text

To force a picture to move with the text:

1. Double-click on the picture.
2. Select “Layout” from the menu.
3. Click on “Advanced.”
4. Select “Picture Position.”
5. Select “Move Object With Text.”
6. Select “OK.”

A Picture Jumps to Another Page or to the Edge of a Page

Try a couple of remedies:

- Instead of dragging the picture, cut and paste it to the correct location.
- Reduce the size of the picture; it may be too large for the space you want to place it in.

CHAPTER 4

DEVELOPING AND VALIDATING PRACTICES

OVERVIEW

Building on the essential preparation material in Chapters 1–3, this chapter offers instructions for developing the actual maintenance practice. The chapter begins by describing the MS Word template, an electronic version of the practice format that you can download from the Web Board (see Chapter 2, Part 2, for instructions) to facilitate the practice-writing process. The chapter continues by reviewing the effort needed to develop practices and offers suggestions for using agency staff and/or contracted resources to get the practices developed. The core of the chapter, and the Guidebook itself, consists of the step-by-step instructions and format for piecing together all of the essential elements needed to construct a completed practice. Like all guidance presented here, use of this format is completely voluntary. Use of the suggested format, however, makes certain that all of the essential material needed for a practice gets considered. Once a practice is developed, the chapter goes on to explain how it can be validated and updated to ensure its appropriateness over time.

As described earlier, you can use one of three approaches to prepare yourself for writing practices. The recommended approach is to read all of the background material provided in Chapters 1–3 first, then use the instructions provided in this chapter to write the practice. A second approach is to start writing the practice using the format contained in this chapter and refer back to specific chapters as needed. A third and "fast-track" approach is to download one of the sample practices found in Chapter 6 or an existing agency practice from the Web Board as described in Chapter 2, Part 2, as a foundation for your own practice, and apply other relevant Guidebook material to suit your specific needs and operation.

DEVELOPING PRACTICES

MS Word Template

An MS Word template, which mimics the hard-copy format presented in this chapter, is available electronically to facilitate writing the practice. In addition to standardizing font style and size, margins, and page layout, the template also allows you to compose a practice entirely on your computer screen. The electronic template has links that will take you to specific areas of the Guidebook for assistance on completing each practice section (i.e., defining the practice objective, listing special tools and safety precautions, including a time standard, etc.). There are also links to those areas of the Guidebook that offer instructions for writing clearly, inserting pictures, and locating reference material from OEMs and other sources. For those not using the MS Word template, go to the table of contents of the Guidebook to manually reference the needed sections.

A hard copy of the template instructions is included as Appendix B; the template is included as Appendix C. The electronic version of both documents can be downloaded from the TRB Maintenance Practices Web Board described in Chapter 2, Part 2.

Effort Required

Developing maintenance practices requires time, resources, and work. Depending on the approach taken, the work involves researching OEM manuals, other agency practices, historical data from your own operation, and other reference materials. The collected material needs to be synthesized, a practice format has to be established, and someone has to write the practice. Once developed, practices need to be validated to guarantee acceptance by the workforce. While this Guidebook will certainly lessen the burden, there is a substantial amount of work required.

Who Develops the Practice?

Agencies, Consultants, or Both

Agencies can do the work themselves by applying the guidance offered here, contract practices out to a consultant, or work together with a consultant.[7] There are advantages and disadvantages associated with each method. Hiring a consultant relieves the agency of staff time, but workers may not accept the practices because they were created by someone perceived to be an outsider. Agencies could use this Guidebook to develop their own practices,

[7] Snyder, R.A., "Solving Maintenance Problems by Using Maintenance Procedures," Paper presented at the APTA Bus Equipment Workshop, Indianapolis, IN, November, 2003.

but doing so requires staff time. Another approach is to hire an experienced consultant to work collaboratively with the agency.

Regardless of who develops the practices, it is essential that the same person(s) write the practice to maintain consistency. Once a process for developing practices is established, agencies are strongly urged to document that process to preserve it as a reference.

Team Effort between Management and Labor

Developing a practice requires a team effort. Any practice with potential safety implications must involve the agency's safety officer if one exists. It is also essential that management work with labor and its union to develop work procedures that both sides can agree upon. The ideal approach involves mechanically experienced supervisory personnel working together with the agency's finest mechanics as a team. Whereas supervisors may be a few years removed from actual hands-on involvement, the agency's most qualified mechanics have current insight into the procedures needed to get the job done right. As mentioned earlier, labor and union involvement is essential to any program that strives to improve productivity. A collaborative approach led by management will cause workers to accept the program and appreciate being recognized for good production, and a spirit of cooperation will develop.[8] In the end, the goal of developing maintenance practices is to improve work skills and the working environment, *not* to find reasons for punishing or firing employees.

Step-by-Step Practice Instructions

This section provides step-by-step instructions for preparing maintenance practices. It serves as a suggested starting point for agencies to develop a format that works best for their operation and that is realistic given the agency's resources. Some will decide to use the format presented here as is, while others will leave out certain steps, add others, or rearrange the order. Again, the choice is yours. The comprehensive nature of the format provided here ensures that all essential elements of a practice are addressed should you decide to use them. The Word template included as Appendix C is based on this format, but it, too, can be modified to suit your particular needs. Sample practices shown in Chapter 6 were developed around this format. Remember, the template includes links to specific sections of the Guidebook to assist you in the practice-development process.

[8] "Labor Productivity Measurement," Recommended Maintenance Practices for Transit Buses, TMC Recommended Practice RP-804, Prepared for the American Public Transportation Association by the Technology and Maintenance Council of the American Trucking Association, Washington, DC, 2002.

Step 1: Practice Title

<Insert the practice title>

Notes: The title is important because, if done properly, it provides a concise description that accurately reflects a specific maintenance job. Agencies can use their own title format to name practices. For example, some agencies may have a specific numeric or letter code protocol associated with specific jobs that needs to be included in the title. You can also use the title format developed for this project. It was created to establish a uniform cataloging procedure to make it easier to post and locate agency practices on the Web Board. The format consists of four distinct sections linked together to form one title name. Instructions for creating a practice title using this format are found in Chapter 5. Regardless of the title format ultimately decided upon for internal agency use, those sharing their practices with others on the TRB Web Board *must use the title sequence presented in Chapter 5 for cataloging purposes*.

Step 2: Agency Name

<Insert the name, address, and contact information of the agency>

Step 3: Date

<Insert the date of current issue and the date of previous release if applicable>

Examples: December 10, 2004 (Supersedes April 15, 1996); March 5, 2005 (Original Issue)

Step 4: Page Numbering

<Insert page number on each page and include current page of total>

Example: Page 1 of 18.

Notes: Consider including the practice title, agency name, issue date, and page number all combined into a footer located at the bottom of each page. (The Word template instructions found in Appendix B include the steps needed for including the footer).

Step 5: Legal Disclaimer

<Insert legal disclaimer (if appropriate)>

Notes: The TRB Web Board contains the following general disclaimer that applies to all Web Board users: Those downloading practices from the TRB Web Board do so with the understanding that:

> The information contained in the published content is provided as a service to the bus transit community and does

> not constitute advice. Every attempt was made to provide quality information for the purposes outlined for this project, but we make no claims, promises, or guarantees about the accuracy, completeness, or adequacy of the content. Maintenance advice must be tailored to the specific circumstances of each agency. Because bus maintenance practices can change without notice, nothing provided herein should be used as a substitute for the advice of competent mechanics and/or maintenance crews.

For most agencies, this generic disclaimer posted on the Web Board will be sufficient. If not, you could repeat the Web Board disclaimer or insert any other disclaimer that you deem appropriate directly into this section of the practice. While agencies do not typically include disclaimers on practices intended for their own employees, including one on practices shared with other agencies clearly forewarns other agencies that your agency is not liable for the information provided. Review Part 1 of Chapter 2 and Appendix A for additional information and samples of other disclaimers. Again, the generic Web Board disclaimer may be sufficient. If so, there is no need to use this section to add a disclaimer to your practice.

Step 6: Copyright Information

<Insert copyright information (if appropriate)>

Notes: Inserting copyright information depends on how much original material (i.e., intellectual property of others) was used in your practice and how much copyright protection you desire for your own material. Concerning material used from other sources, a dedicated section in the practice allows you to give proper credit to the author(s). This is especially important if you use large amounts of information "as is" or an illustration from a protected (i.e., copyrighted) source. It is strongly recommended that you cite your sources so that readers will not be misled into thinking that the information originated with you or your agency. You must request permission from the author(s) before using pictures and/or large amounts of text. The following is an example of credit given to the authors of material used in an agency practice:

> The information contained in this maintenance practice is based on illustrations and information provided by the XYZ Company as contained in their Maintenance Manual, pages 88-93. Permission to use the copyrighted material was granted by the XYZ Company.

Concerning copyright protection for your own material, copyright law automatically protects any original material once it is in a fixed format, including once it is saved on a computer hard drive. Although not necessary, you may want to add a copyright symbol to dissuade others from improperly using your material. Additional information on the use of copyrights is provided in Chapter 2, Part 1, and in Appendix A.

Step 7: Purpose

<State the purpose of the maintenance practice in concise terms by answering: what are you trying to achieve with this practice?>

Notes: A short statement describing the purpose of the practice informs maintenance personnel that they have the correct practice for the job at hand and allows you to emphasize any special points. It also gives other agencies additional insight into the practice. For example, the statement below emphasizes that a removed starter will be rebuilt instead of being discarded:

> This maintenance practice provides instructions for the proper removal and replacement (R&R) of starter motor and related parts on a 2000 Orion V bus, including proper methods for returning the removed starter as a core to the parts department.

Other points might include instructions for special safety procedures, instructions for installing a correct part when other parts could be used mistakenly, or instructions for using special tools that you may want to reemphasize. For example:

> This maintenance practice provides instructions for the proper removal and replacement of rear radius rod bushings on a 2000 Orion V bus, including instructions for using special tool #123.

Step 8: Glossary of Terms

<List any special terms used in the practice followed by their definitions (if applicable)>

Notes: Maintenance personnel in all transportation fields use a variety of terms to describe the same part, component, or procedure. A "differential" to one mechanic may be known as a "rear-end," "diff," or "pumpkin" to others. Agencies may want to consider including a glossary to clearly define words or procedures so that maintenance personnel, including those from other locations and agencies, all have a common understanding.

Unfortunately, the transit industry does not publish a list of standard maintenance terms. However, in cases where multiple terms apply, it is recommended to use the one referred to in the OEM manuals.

Step 9: Summary of Local Conditions

<Highlight any special procedures included in the practice that address a condition unique to your particular operation (if applicable)>

Notes: While many practices apply equally regardless of the climate, shop condition, or duty cycle, certain procedures vary depending on those conditions. This practice section allows agencies to include a summary of any

special steps taken as a result of a condition unique to the operation. This summary can be important for two reasons. One is to alert maintenance personnel, some of whom may come from different climates and shop environments, of the importance of following certain procedures that they may not understand as being necessary. The other is to give other agencies that are considering your practice additional insight to determine if all sections are applicable to their particular maintenance operation and climate.

When preparing material for this section, agencies may need to step back and think about conditions that are in fact unique to those "looking in" from outside the agency. For example, special precautions taken to prepare buses for winters in an extremely cold climate are commonplace to someone from New York, but may be unfamiliar to someone from Phoenix.

Below are two examples of local condition summaries:

> This practice for performing daily refueling and service line functions includes a special procedure for removing tree leaves from radiators from September 15 to December 15.

> This practice for performing a 6,000-mile PM inspection includes special procedures for ensuring air intake sealing to prevent excessive airborne dirt, which is common in this environment, from bypassing the air filter and entering the engine.

Part 4 of Chapter 2 describes how OEMs and agencies have altered their practices to conform to special weather conditions. Also included are two Internet sites that provide climatic information that agencies might find helpful when writing their practices or when considering another agency's practice.

Step 10: Parts

<List all parts used in the practice (if applicable)>

Notes: Many maintenance jobs require replacement parts. Some agencies allow maintenance personnel to make a part-replacement determination, while others make certain replacements mandatory. Regardless of the policy, including a list of replacement parts directly in the practice makes certain that correct parts will be used and streamlines the process of obtaining parts from the parts department. Doing so, however, requires that practices be updated every time a part is superseded.

Be sure to include a description of each part (e.g., Muffler and Isolator Mount) followed by its numerical part number. If the practice applies to a range of buses or components that use different parts, be sure to include the application for each (e.g., Muffler, New Flyer 4000-4100 Series, #092-11-021). Also include any other information needed for that part, including superseded numbers or alternative numbers if parts are available from different vendors.

For those that require mandatory replacement of parts for specific repairs and rebuilds, some agencies find it more effective to kit parts together (i.e., group all needed parts together in one package). Doing so makes all replacement parts conveniently available and saves time by not having the parts clerk retrieve each part separately.

For those who want to calculate the total cost for each maintenance activity for budgeting purposes, the total cost of the parts used in the practice could be totaled and combined with the labor cost (see Step 11) to produce a total job cost. This information is also useful for determining if it is more cost effective to outsource certain jobs. Although costing information can be derived from the practice, *actual costs should not be listed in the practice.*

Step 11: Time Standard

<Insert the total time allocated for the practice (if desired)>

Notes: The use of time standards depends on each agency's management approach. Including a standard makes it clear that the agency expects the job to be done in a certain amount of time. It is also useful for budgeting and staffing purposes. Part 5 of Chapter 2 contains additional information on developing and using standard repair times (SRTs).

Step 12: Special Tools

<List all special tools needed for performing the task (if applicable)>

Notes: Some jobs require the use of special tools, which usually consist of tools not typically found in a mechanic's tool box, such as tools issued by the OEM, or tools that extend beyond the basic tool requirements established by the agency. Listing these tools in the practice helps to ensure that workers will use them and will obtain the correct ones prior to beginning the job.

Step 13: Safety Precautions/Applicable Regulations

<List any safety precautions and regulation compliance that pertains to the practice (if applicable)>

Notes: Virtually every maintenance practice is subject to environmental, health, or safety regulations. These regulations can be extensive and complex. Some require mandatory compliance, while others are voluntary. Agencies are urged to consult with the appropriate staff (e.g., agency attorney or safety officer) if available to determine which maintenance tasks require regulation compliance. A summary of the various regulations and

their impact on maintenance practices is found in Chapter 2, Part 7.

Including applicable regulations in the practice is not essential. Doing so, however, informs maintenance personnel and other agencies that might use your practice that procedures contained in the practice address specific requirements. This will help workers understand that there are factors outside the agency's control that require them to carry out a task in a very specific manner. Below is an example of wording that might be used in a practice for removing and replacing a muffler.

> The procedures used in this practice comply with exhaust system routing requirements set forth in the USDOT Code of Federal Regulations (CFR) 49CFR393.

When it comes to safety precautions, some are legally required while others are based upon OEM recommendations, agency experiences, and just plain common sense. The purpose of informing workers in a separate practice section is to prepare them in advance of the safety precautions that must be followed, such as:

- Wearing eye, face, foot, ear, hand, and other protection;
- Hoisting, lifting, and jacking vehicles;
- Cleaning up any lubricants that may fall on the shop floor;
- Not overfilling components that contain lubricants;
- Not smoking when performing certain tasks;
- Turning off battery power when performing certain tasks; and
- Reading other safety material or bulletins before starting a job.

Step 14: Hazardous Materials

<Identify any hazardous materials generated from the maintenance tasks, including the proper handling and disposal methods for those materials (when applicable)>

Notes: Some jobs involve hazardous materials that workers need to be informed of in advance. Again, agencies are strongly urged to determine which materials are classified hazardous and the procedures for handling and disposing of them because requirements vary by region. A summary of the various regulations that include hazardous material is found in Part 7 of Chapter 2. Examples of maintenance practices that may generate hazardous materials include:

- Handling and disposal of waste oil and filters;
- Handling and disposal of particulate filters (i.e., exhaust filters to reduce emissions);
- Handling and discharge of air conditioning refrigerants; and
- Handing, application, and disposal of paints.

Step 15: Step-by-Step Procedures

<Insert step-by-step instructions for each task, and number each one sequentially. Also identify any additional reference material (e.g., OEM manuals) for workers to check when performing the tasks (if applicable)>

Notes: This section represents the heart of the maintenance practice because it identifies each task that the worker must follow to successfully accomplish the job at hand. The material used in the step-by-step instructions is based on the agency's own experiences and its review of applicable reference material, especially the OEM manuals, as described in Parts 2 and 3 of Chapter 2. Documenting work procedures based solely on existing agency experiences is not recommended because the "existing way" may not be the best, the most efficient, or legal. Reviewing OEM manuals, similar practices developed by other agencies, and publications from other sources will most likely introduce methods that may have been overlooked or unknown.

The level of detail provided in the step-by-step instructions must be sufficient for the worker to understand each job task and can be handled in one of two ways. One is to make practice instructions a summary of more detailed material used in the agency's formal training program or included in OEM manuals. In this case, the practice simply refreshes the worker's memory on more detailed material found elsewhere. If this is the case, include a reference to the supplemental material at the beginning of this practice section. The other way is to make the instructions so comprehensive that they include all of the information needed to carry out the work. Whereas the first approach would instruct workers to raise the bus on a lift and would refer workers to other material for instructions on how to place a specific bus on a specific lift, the second approach would include all of the information needed within the practice itself. Additional information on integrating training and practice material is found in Part 6 of Chapter 2.

The most effective instructions are those that are numbered sequentially, that break up each task using short descriptions, and that begin with a clear command. The example below describes the first few steps of a practice to remove and replace a rear wheel seal.

> Step 1: Raise bus on lift to needed height.
> Step 2: Back off rear brakes by turning slack adjuster, adjusting hex nut counterclockwise using a 12-mm Allen wrench.
> Step 3: Remove wheel lugs with an impact gun.
> Step 4: Remove both rear wheels/tires.

Include as many individual steps as needed to describe each task, inserting pictures and other graphics where appropriate, and using a clear, concise, and understandable writing style as described in Chapter 3. Examples of sample practices developed from this guidance are included in Chapter 6.

PMI Checklist

Because of the many individual steps involved, PMI practices typically involve a checklist. (A checklist can also be used for more involved jobs, such as engine or transmission rebuilding.) The checklist format breaks down each inspection item and includes a "box" or area to indicate if the inspection revealed a normal or abnormal condition, typically expressed as either pass or fail, good or no good.

Virtually every agency uses some form of checklist to carry out inspections. While there is no single "universal" format to follow, agencies may want to consider the following approaches for a bus PMI as a way of modifying their existing format:

- Include space to indicate bus number, mileage, garage (if applicable), date, and other essential information.
- Include space for signature and/or employee identification number of person(s) performing the inspection.
- Include space to indicate fluid and filter changes for each inspection type. For example:
  - Inspection A: Engine oil and filter.
  - Inspection B: Engine oil, engine filter, coolant filter, etc.
- Break down the inspection checklist into separate categories (e.g., Part 1 and Part 2). For example:
  - Part 1: Initial Checks (i.e., checks performed while the bus is being moved into the shop)
    - Backup alarm, speedometer operation
    - Etc.
  - Part 2: Diagnostic Checks (i.e., checks requiring a diagnostic tool plug-in)
    - Engine oil pressure
    - Fuel pressure
    - Etc.
  - Parts 3, 4, 5, etc.: Undercarriage Checks, Exterior Checks, Interior Checks, etc.
- For each major category consider including the various action items that need to take place before carrying out the inspections. For example, action items under Diagnostic Check could include:
  - Connect manometer to check air-intake vacuum restriction
  - Connect exhaust hose
  - Turn master switch to "Run" position, listen for ABS valve bursts, and start engine
- For each inspection item, include a checkbox for indicating:
  - If the inspection revealed a normal condition (e.g., pass), or an abnormal condition that requires follow-up work (e.g., fail)
  - The criteria for making the inspection. For example:
    - For ABS/traction control valves: a total of four air bursts should be heard
    - For fuel pressure: 25–30 psi @ idle, 70–90 psi at top RPM, etc.
- Number each inspection item consecutively (e.g., 1–17).
- Add a sheet to each inspection checklist to allow the mechanic to elaborate on the defects found during the inspection. The sheet should include space to indicate the corresponding checklist item number and space for describing the defect. For example:
  - Item #2 (backup alarm): beeps once then turns off.
- Consider including a body diagram sheet with each PMI checklist that shows the front, rear, and both side profiles of a generic bus to indicate the location of specific body damage.

Note: Examples of checklists used to develop sample PMI practices are found in the sample bus PMI practices found in Chapter 6.

Quality Control Checklist

Agencies may also want to include in their practices a checklist to indicate when a supervisor or lead worker needs to inspect certain work steps and sign for them before having the worker begin the next task. This can be especially useful for component rebuilds or repairs that involve troubleshooting. In the case of rebuilds, a supervisory signoff ensures that various tasks have been performed according to quality standards before the component has been fully assembled (i.e., before any faulty workmanship can be hidden from view). In the case of troubleshooting, a supervisory signoff makes certain that the correct fault diagnosis has been made before the worker begins the repair.

Signoff inspections, if required, can be done on a separate checklist attached to the practice. Information contained in the checklist could include:

- Practice description (e.g., rebuild circulating pump motor model XYZ),
- Employee name and/or identification number,
- Date and time started and ended,
- Identification of each subtask requiring signoff approval (see Table 4-1),
- Employee signature and date, and
- Supervisor signature and date.

VALIDATING AND UPDATING PRACTICES

Validating

After practices have been developed, they must be validated to make certain that the procedures contained in them are appropriate, safe, and representative of efficient task sequencing. The validation process continues on a periodic basis to keep practices accurate and effective over time. If time standards are used in practices, they will also need to be validated together with the work procedures. Additional

TABLE 4-1 Example identification of subtasks requiring signoff approval

Task Number	Task	Specification (if applicable)	Supervisor Initials
4	Disassemble and clean all parts		
6	Check armature for shorts		
12	Test amp draw	Between 5 and 8 amps	

information on developing and validating time standards is found in Chapter 2, Part 4.

The best process to validate practices involves maintenance personnel who were not directly involved with the development of the practice. Their involvement in validating the practice will indicate whether the instructions are understandable and can be effectively carried out. If management developed the practice with experienced supervisory personnel and did not involve shop mechanics or the union, the validation process is a good time to bring them in to test, adjust, and ultimately accept the work procedures. As has been stated throughout this Guidebook, union involvement is absolutely essential to the success of any program that improves productivity and efficiency.

The process to substantiate a practice does not have to be complex. The key is to present the instructions contained in the practice to a sampling of maintenance personnel who ultimately will be responsible for following the instructions. The purpose is to determine if the practice makes sense and to get input on ways the practice could be improved. Sampling should consist of maintenance personnel with varying degrees of competence. While mechanics may be grouped in a similar job classification, some perform better than others. Basing the adequacy of the practice solely on the most competent will not give you a true indication of its worth. Your best mechanics will, however, give you the most valuable feedback. Others will give you a good indication if the instructions are understandable and can be followed. In the end, the validation process is a "tuning" of the practice to produce a legitimate set of instructions that maintenance personnel will ultimately accept and find useful. Once validated and accepted, it is the responsibility of management to make sure that the contents of the newly issued practice are communicated to maintenance personnel. This can be done formally through the training department or informally on the shop floor by supervisory personnel.

Updating

If practice validation represents the "initial tuning," updating is the "fine tuning." It begins by providing workers with a method for submitting requests to revise the practice as they discover more efficient ways to accomplish the tasks or find flaws with the original approach. Parts and training personnel should also be included in the process. Requests for changes could come informally through supervisors or formally using a form designed to collect this information. The person(s) responsible for writing the practices then use the suggestions offered from agency personnel, service updates issued by OEMs, information obtained from other agencies' practices, and other sources to periodically update the practices. In addition to modifying practices based on any new information that comes along, agencies should actively reach out to those in the shop to get additional information. The periodic review of practices should be scheduled on a regular basis (e.g., annually) to ensure that the review gets done.

Another way to update practices involves monitoring road calls and other unscheduled maintenance events to determine how practices can be modified to reduce such unscheduled maintenance events. The measure of any practice is its ability to reduce unscheduled maintenance events by addressing the cause of failures during scheduled activities such as PMIs or repair campaigns.

Once updated, practices should include the revised date along with the original issue date. The step-by-step format used in Chapter 4 and the corresponding Word template both include provisions for including these dates. Revised practices then need to be distributed to affected maintenance personnel (for agencies that integrate practices with their training program) and to the training department.

CHAPTER 5

UNIFORM TITLE FORMAT FOR SHARING PRACTICES

OVERVIEW

This chapter describes a uniform practice titling format so practices can be located easily on the Web Board. Agencies can continue to use their own title format to conform to existing protocols. However, regardless of the title used for internal agency use, those wanting to share their practices with others on the TRB Web Board *must use the title sequence presented here to ensure uniformity for cataloging purposes*. Any updates made to this titling sequence will be posted on the Web Board.

Sharing your practices with others on the Web Board is completely voluntary but highly recommended. Doing so provides a valuable service to others who could benefit from the insight and knowledge that you have gained in maintaining and repairing buses. Agencies will, however, need a computer and Internet access to exchange practices.

PRACTICE TITLE FORMAT

The format for developing a title for practices posted on the Web Board consists of four distinct sections: topic heading, task description (if applicable), component application (if applicable), and bus application (if applicable).

Topic Heading

Select one (*only one*) heading (e.g., Bus PMI) from the 13 headings below that best describes the general practice area. Read each one carefully before making your selection, and select the one that best describes the practice topic. A description follows each topic heading to assist with your selection. This first section of the title is critical because it determines where the practice will be cataloged on the Web Board. Separate each title section with a semicolon (;).

- **Bus PMI:** Pertains to practices involving PMIs to specific buses (e.g., Orion V, Bluebird Ultra LMB, and Chance RT-52).
- **Component PMI:** Pertains to practices involving PMIs to major bus components and systems, such as HVAC, door systems, and wheelchair lifts.
- **Drivetrain:** Includes engine, cruise control, fast idle, transmission, differential, driven axles, and all related equipment (except electrical).
- **Chassis:** Includes steering, suspension, nondriven axles, wheels, tires, fuel tank and lines, fire suppression, corrosion treatment, mud flaps, tow hooks, articulation joint, and related subsystems.
- **Brakes:** Includes compressor, air dryer, brake pneumatics, drums, linings, chambers/calipers, slack adjusters, and anti-lock brake systems (ABS).
- **Electrical:** Includes batteries, wiring, relays, connectors, starting system, charging system, multiplexing, electronic destination signs, camera systems, public announcement system, automatic passenger counter (APC), automatic vehicle location (AVL), fare collection, stop request system, radios, interior and exterior lighting, back-up alarm, and related equipment.
- **Accessibility:** Includes kneeling system, wheelchair lifts and ramps, securement/restraint devices, other hardware items for passengers with visual or other impairments, and all related equipment (except electrical).
- **HVAC:** Includes air conditioning, heating, auxiliary heaters, ventilation, defroster, and related equipment.
- **Interior:** Includes subsurface and surface flooring, manual destination signs, steps and covering, stanchions, passenger assists, modesty panels, access panels, driver and passenger seating, driver's area, all interior roof and side paneling, insulation, interior bike racks, interior compartments for radio equipment and storage, emergency equipment (first aid, safety triangles, etc.), interior mirrors, interior signage, and related equipment.
- **Body:** Includes all body framework and skin, doors and door systems, equipment access panels and doors, wiper/washer system, glazing, bumpers, roof hatches, wheel housings, fender rubber, rub rails, exterior bike racks, exterior mirrors and controls, exterior signage, articulation bellows, and related equipment.
- **Service:** Includes daily service line functions, fueling, detailed cleaning operations, road servicing, and related activities.
- **Facilities and related equipment:** Includes all repair, storage, and fueling facility structures and grounds; air compressors; lifts; and related equipment.
- **Miscellaneous:** Includes any topics not covered above, such as personnel issues (job descriptions, job skills analysis, ergonomic studies, etc).

Task Description (If Applicable)

Select one (*only one*) maintenance description below that best describes the type of task being performed:

- Repair
- Remove and Replace
- Troubleshoot
- Overhaul
- Other

Note: A specific task description is not applicable in all cases. For example, if Bus PMI or Component PMI is selected above, this section of the title can be omitted; see example below.

Component Application (If Applicable)

The next descriptor is the component that the task description is being applied to as distinguished by its product name, make, and model designation (e.g., Alternator, Delco DN 50). A specific component is not applicable in all cases (e.g., in the case of a Bus PMI, service line procedures, or a job skills analysis). If the description is not applicable, do not include it in the practice title.

Bus Application (If Applicable)

The final descriptor is the bus classified by its year, make, model, and length that the practice applies to (e.g., 1989 Orion V, 40-foot). Again, this title section may not apply in all cases, such as a practice pertaining to facilities or a component common to several types of buses (e.g., farebox or destination sign).

Below are examples of complete practice titles. Remember that the first descriptor is the most important because it determines where it will be placed in the Web Board cataloging system. Also remember to separate each title section with a semicolon (;).

- Electrical; Remove and Replace; Alternator, Delco DN 50; 1989 Orion V, 40-foot.
- Electrical; Troubleshoot; Allen-Bradley Multiplex System Model XYZ; 2001 New Flyer D60LF, 60-foot
- Bus PMI; 1990 Orion V, 40-foot
- Component PMI; Thermo King Rooftop Air Conditioner Model XYZ; 2003 Gillig Phantom, 40-foot
- Service; Service Line Functions

POSTING PRACTICES ON THE WEB BOARD

Once you create a title for practices that you would like to share with others, go to the "Using the Web Board" section of Chapter 2, Part 2, for instructions on how to post them. Remember to compress Word documents containing photos to reduce the overall file size, thereby making it easy to transfer and upload the file. To do so, select "View" at the top of the screen, and then click on "Toolbars." Select the "Picture" toolbar and then click on the "Compress Picture Icon," which is the 10th icon from the left on newer Word versions and looks like a box with arrows pointing in from each of the four corners.

CHAPTER 6

SAMPLE MAINTENANCE PRACTICES

Seven maintenance practices were developed from applying the guidance offered in this Guidebook. Topics were selected to appeal to a wide range of agencies operating small, "cutaway"-type automotive vans to full-size transit buses. The practices illustrate how the guidance is applied and offers agencies seven actual practices that they can use as is or modify to suit their particular needs and local operating conditions. Four members of the research team, each with varying degrees of computer and writing skills, developed the practices. Although the sample practices were proofread for grammar and accuracy, each reflects the writing style and approach of the individual author.

The sample practices were all developed in cooperation with transit agencies based on their local conditions. Lessons learned from developing these practices were then used to fine-tune Guidebook material. In some cases, the finished practice builds upon an existing agency practice and enhances it with additional detail offered by the Guidebook, such as the use of photos, additional safety information, and more descriptive step-by-step work procedures. In other cases, the practices were developed to fill a void in the agency's existing library of practices. For example, the Potomac and Rappahannock Transportation Commission (PRTC) recently took delivery of Gillig buses with an AC system new to their operation. The AC PMI practice was developed specifically for their new AC/bus combination.

Each practice follows the format presented in Chapter 4 of the Guidebook. Some were developed using the MS Word template, while others were created without the template. Practice titles are based on the classification system used to post practices on the Web Board as defined in Chapter 5. Table 6-1 summarizes the seven sample practices included in this chapter.

TABLE 6-1 Summary of sample practices

Practice Title	Purpose	Cooperating Agency and Reference Material	Notes
#1 - Bus PMI; 1990 GMC/RTS/NOVA, 40-foot high floor	Provides instructions for conducting a PMI on a full-size bus	- MTA New York City Transit (MTA NYCT) - GMC/RTS/NOVA	- Guidebook format was used to create an introduction to the PMI checklist - Checklist format is based on MTA NYCT inspection sheet, which is extremely thorough - Includes body diagram for noting defects
#2 - Bus PMI; 2003 STARTRANS Senator, 20-Ft.; Ford E-350 Chassis	Provides instructions for conducting a PMI on an automotive-based "cutaway"-style bus	- RADAR, Unified Human Services Transportation Inc., Roanoke, VA - Supreme - Ford Motor Company - Haynes	- Word template format was used to create an introduction to the PMI checklist - Practice is of particular interest to smaller agencies operating this popular Ford chassis
#3 - Component PMI; Thermo King Model T11-M85 AC with IntelligAIRE II; 2004, Gillig, 30-foot low floor	Provides instructions for conducting an air conditioning system PMI on a full-size bus	- Potomac and Rappahannock Transportation Commission (PRTC) - Thermo King Corporation	- Applicable to large buses with a similar AC system - Serves as a framework for developing HVAC PMI on other buses - Section added that lists additional AC reference material available to technicians if needed
#4 - Electrical; Repair; All buses	Provides an introduction to electrical circuit failures, meter usage, and repair	- PRTC - Thermo King Corporation - TMC RP 129	- Applicable to all buses - Includes general electrical troubleshooting, wire repairs, and use of multi-meters - Prohibits use of jumpers and test lamps

TABLE 6-1 (*Continued*) Summary of sample practices

Practice Title	Purpose	Cooperating Agency and Reference Material	Notes
#5 - Brakes; Remove and Replace Front Brakes; 2003 STARTRANS Senator, 20-Ft.; Ford E-350 Chassis	Provides instructions for the proper removal and replacement of front brake pads on a cutaway-style bus	- RADAR, Unified Human Services Transportation Inc., Roanoke, VA - Supreme - Ford Motor Company - Haynes	- Word template format was used to create the entire practice - Practice is of particular interest to smaller agencies operating this popular Ford chassis
#6 - Body; Door Adjustment; Vapor/NFIL Slide Glide Door; 2002 New Flyer, 40LF	Provides instructions for the proper adjustment of front or rear slide glide style doors on a full-size bus	- SEPTA - New Flyer Industries, Ltd.	- Applies to front and rear door adjustments - Can be adapted to other buses with similar door style - Includes adjustment of door operating speeds
#7 – Service; Service Line Functions	Defines the duties for daily service line operations, including fueling, cleaning, and critical mechanical checks	- Lynx, Orlando, FL	- Can be applied to any service line operation - Includes daily servicing and cleaning functions - Also includes detailed cleaning functions

SAMPLE MAINTENANCE PRACTICE #1

Title
Bus PMI; 1990 GMC/RTS/NOVA, 40-Ft High Floor

Agency Name
This sample practice is based on a General Inspection Sheet provided by MTA New York City Transit (MTA NYCT) and enhanced to add information on the oil/filter change process, safety precautions, instructions for using the Inspection Sheet, and other items.

Date
February 7, 2005 (Original Issue)

Legal Disclaimer/Source
The following disclaimer is used when this practice is posted on the TRB Maintenance Practices Web Board; remove for internal agency use:

> The information contained in the published content is provided as a service to the bus transit community, and does not constitute advice. Every attempt was made to provide quality information for the purposes outlined for this project, but we make no claims, promises, or guarantees about the accuracy, completeness, or adequacy of the content. Maintenance advice must be tailored to the specific circumstances of each agency. Because bus maintenance practices can change without notice, nothing provided herein should be used as a substitute for the advice of competent mechanics and/or maintenance crews.

Purpose
This maintenance practice provides instructions for conducting a PMI on a GMC/RTS/NOVA full-size, 40-foot bus.

Glossary of Terms/Abbreviations
The following abbreviations are used on the attached PMI Sheet:

- NG: Not Good. The criteria listed for a given inspection have not been met.
- S/W: Steering Wheel
- ABS: Antilock Braking System
- psi: pounds per square inch (pressure)
- Min.: Minimum

Summary of Local Conditions
- The procedures used in this practice are based on using an in-ground bus lift.
- Inspections are done at 4,000- to 6,000-mile intervals depending on bus duty cycle.
- PMIs for HVAC and wheelchair lifts are covered by other agency practices.

Parts
Engine Oil Filter (see Parts clerk for appropriate part number).

Time Standard
Not applicable.

Special Tools
Manometer
Pro-Link Engine Diagnostic Tool
Tire Pressure Gauge
Battery Tester
Torque Wrench

Safety Precautions/Applicable Regulations
- Wear eye and hand protection.
- Pressurized lines should not be disconnected until the pressure is safely and controllably released.
- Attach exhaust hose to bus exhaust pipe outlet.
- Always use Safety Stands to support a lifted vehicle.
- When addressing the air pressure system, note that a malfunctioning pressure relief valve may not relieve pump pressure and that closing the shutoff valve may cause severe pump damage or high-pressure hoses to rupture. Constantly observe the pressure gauge while closing the shut-off valve. If pressure rises rapidly or appears to be uncontrolled, do *not* completely close the valve before inspecting the pump and pump relief valve.
- Be careful when opening the filler cap for the coolant. Release slowly and make sure to bleed off all pressure. The sudden release of pressure from a heated coolant system can result in a loss of coolant and possible injury (i.e., scalding) from the hot fluid.
- This practice complies with United States Department of Transportation (USDOT) requirements under CFR 49 Part 393 and CFR 49 Part 396.

Hazardous Materials
Waste oil and filters are considered hazardous waste and must be disposed of in containers set aside for them; check with your Supervisor if you are not sure of their location. Wear latex gloves when handing waste oil and filters.

Step-by-Step Procedures – Bus Preventive Maintenance Inspection

The mechanic carrying out the inspection will use the attached PMI Sheet as follows:

1. Complete the top part of the sheet, including bus number, hub mileage, garage, and inspection start date.
2. Also note the type of inspection being performed (i.e., “A” level, “B” level, or “C” level). (Note: This sample practice is for a basic “A” level inspection, where the engine oil and filters are changed every 4,000 to 6,000 miles depending on the

duty cycle. Additional inspection activities, such as fuel and air filter changes, are performed at different inspection intervals.)

3. Sign your name and enter your badge (employee) number. Also have your helper sign their name and enter their badge (employee) number.
4. Make sure that the engine compartment and bus undercarriage have been steam cleaned at least 12 hours before the inspection begins.
5. Make sure that the bus is brought into the inspection area for the actual inspection.
6. Inspection steps listed on the attached Preventive Maintenance Sheets must be followed in the order shown. All the items listed in the Sheet must be inspected.
7. The **Action Items** listed on the Sheet in each category must be undertaken before the actual inspection occurs.
8. The **Criteria listed** for each **Performance Check** must be closely followed.
9. Where the performance for the particular check is acceptable, it should be noted on the form as “OK” by checking-off the associated box. If it is not acceptable, it should be noted on the form as “NG” and the appropriate box checked-off.
10. For those items found to be outside acceptable performance, a description of the defect or unacceptable performance should be noted on the attached Defect Description Sheet.
11. A separate form containing a Bus Diagram Sheet is available to indicate all body damage.
12. The completed Preventive Maintenance Inspection Sheets along with the Defect Description Sheet and the marked-up copy of the Bus Diagram Sheet is then submitted to your Supervisor for their review and approval. Be sure to have your Supervisor sign their name and enter their badge (employee) number.

PREVENTIVE MAINTENANCE INSPECTION - SHEET 1

INSPECTION TYPE A B C					Signature	Employee No.
Bus Number		Garage		Inspector		
Hub Mileage		Date		Helper		
				Supervisor		

Beginning Checks

Action Items:

- ⇨ Hook up manometer to check air-intake vacuum restriction.
- ⇨ Clear work area in rear of bus to check speedometer and parking brake.
- ⇨ Turn master switch to "Run". Listen for ABS valve bursts. Start engine.
- ⇨ Reverse bus. Move forward, check speedometer. Align bus in work area for lifting.
- ⇨ Confirm exhaust hose is in place.

Performance Checks:	**Check Criteria:**	**OK**	**NG**
1. ABS/Traction Control Valves	Total of four air bursts should be heard	☐	☐
2. Back-Up Alarm	Must be audible from driver's seating area	☐	☐
3. Speedometer Operation	Must register vehicle speed	☐	☐
4. Parking Brake Operation	Bus does not move OR bus stops upon application	☐	☐

Engine Diagnostics/Miscellaneous

Action Items:

⇨ Hook-Up Engine Diagnostics. Print out fault codes. Attach to inspection sheet.
Clear all inactive codes. Take following engine performance readings:

Performance Checks:	**Check Criteria:**	**OK**	**NG**
5. Engine Oil Pressure (psi)	IDLE: _____ (25-45) TOP RPM: _____ (40-64)	☐	☐
6. Engine Speed (rpm)	IDLE: ____ (800+/-50) FAST: _____(1000+/-50) TOP RPM: _____(2150+/-50)	☐	☐
7. Air Intake Restriction (in H_2O)	Must be less than 7" H_2O at top RPM	☐	☐
8. Fuel Pressure	IDLE: 25 TO 30 psi: TOP RPM 70 TO 90 psi	☐	☐
9. Transmission Fluid Level	Level OK for Cold & Hot running conditions (Non-Sealed Sticks)	☐	☐
10. Hydraulic Filtration Pressure (psi)	Must be less than 25 psi (or within green zone in dial)	☐	☐
11. Anti-Freeze Protection Level	Should be in range of -34^0 +/- 10^0 F		

Drivability Function Checks (Engine Running)

Action Items:

⇨ Release Parking Brake. Deplete Air System until Parking Brake Button Pops Up

Performance Checks:	**Check Criteria:**	**OK**	**NG**
12. Low Air Alarm Trigger	Audible and visual low air indicator below 70 psi	☐	☐
13. Parking Brake Safety Pop-Up	Engages at 30 to 40 psi, if applicable	☐	☐
14. Air System Re-Charge Time	Must be less than 4 minutes	☐	☐
15. Air Governor Cut-In Pressure	Cut-in pressure: about 90 psi	☐	☐
16. Air Governor Cut-Out Pressure	Cut-out pressure: about 120 psi	☐	☐
17. Air Dryer Purge Cycle Operation	Cycles when governor cuts-out	☐	☐
18. Starter Interlock	Starter must not engage when engine running	☐	☐
19. Front Door & Dome Lights	Must open and close as intended; lights illuminate	☐	☐
20. Kneeling System and Interlock	Kneeler horn & lights activate; interlock engages; kneels and retracts	☐	☐
21. Electric Side Mirror Adjustment	Must be operational	☐	☐
22. Windshield Wipers/Wash	Must operate as intended	☐	☐
23. Dash Lights/Dimmer Switch	Gauges must Illuminate	☐	☐
24. Dash Tell-Tale Lamps	All squares should illuminate in test mode	☐	☐
25. Voltage Guage Readings	12V: 13/8+/- 0.3V 24V: 27.6+/- 0.3V	☐	☐
26. Speak-Easy Operation	Voice recording must be clearly audible w/door operation	☐	☐
27. Horn/Steering Wheel Adjustment	Horn must be audible in all S/W positions	☐	☐

PREVENTIVE MAINTENANCE INSPECTION - SHEET 2

INSPECTION TYPE A B C						
Bus Number	Date:				—	—

Drivability Function Checks (Engine Running) - Cont'd

Performance Checks:	**Check Criteria:**	**OK**	**NG**
28. Steering Wheel Adjustment	S/W must be fully adjustable; all hardware & controls intact	☐	☐
29. Seatbelt/Seat Adjustment	Must be fully adjustable; all hardware & controls intact	☐	☐
30. Sun Visor & Vehicle Registration	Operable and present	☐	☐
31. Fire Suppression System	Manual actuator pull-pin and/or guard in place; system "OK"	☐	☐
	Light is on; pressing "test" triggers audible and visual alarm		
32. Operator's Light	Must be operational	☐	☐

Drivability Function Checks (Engine "Off")

Action Items:

- ⇨ Turn Engine "Off"
- ⇨ Turn "On" Interior Lights
- ⇨ Activate Rear Door

Performance Checks:	**Check Criteria:**	**OK**	**NG**
33. Accelerator/Brake Pedals	Roller, plunger and pedal pin all secure and intact	☐	☐
34. Handheld Fire Extinguisher	Present, secure and charged in green zone	☐	☐
35. Interior Mirrors	Present and secure	☐	☐
36. Operator's Stanchion	Present and secure	☐	☐
37. Forward Roof Hatch	Secure, opens and closes	☐	☐
38. Stanchions & Related Hardware	Secure and free of damage	☐	☐
39. Passenger Seats	Secure and clean (free of rips, tears, graffiti, gum, etc.)	☐	☐
40. Interior Decals	Secure, clean and legible	☐	☐
41. Passenger Stop Requests	All touch tapes and pushbuttons are properly indicated	☐	☐
42. Windows	None broken/cracked & are secure, slide and locks	☐	☐
43. Emergency Window Hatches	Open and latch shut as intended	☐	☐
44. Rear Roof Hatch	Opens and closes as intended	☐	☐
45. Interior Lighting	All lights operational. Light panels in place & secure	☐	☐

Rear Door Checks

Action Items:

- ⇨ Turn Engine "On"

Performance Checks:	**Check Criteria:**	**OK**	**NG**
46. Rear Door "Open" Lights	All green lights illuminate	☐	☐
47. Rear Door Touch Tapes	Left and right door touch tapes activate door opening	☐	☐
48. Door Gap & Push-Pull Test	Gap< 3". Minimal play. Door hinges & seals intact	☐	☐
49. Door Open Interlock Function	Brake is applied & accelerator is disabled when doors are held open following a "Close Door" command	☐	☐
	Bus movement disabled upon a "forced" unauthorized door opening	☐	☐
50. Door Closed Interlock Function	Stepwell voice recording and/or buzzer is audible		
51. Door Cycle Test	Door opens & closes as intended after above steps	☐	☐

Bus Exterior Checks

Action Items:

- ⇨ Turn Master Switch to "Off" then to "Lights" position. (Engine Not Running)
- ⇨ Set Destination Sign to Test Pattern. Turn "On" all Exterior Lights
- ⇨ Conduct Walk-Around Inspection. Note Body Damage on Bus Diagram Sheet.

Performance Checks:	**Check Criteria:**	**OK**	**NG**
52. Wipers/Wiper Blades	Secure. Blade edges not worn & free of damage	☐	☐
53. Front Route Sign	Sign illumination operational.	☐	☐
54. Curbside Minor	Secure & undamaged	☐	☐

PREVENTIVE MAINTENANCE INSPECTION - SHEET 3

INSPECTION TYPE A B C					
Bus Number		Date:			

Bus Exterior Checks - Cont'd

Performance Checks:	**Check Criteria:**	**OK**	**NG**
55. Fuel Cap/Fuel Fill Nozzle	Present, secure & intact. No indication of fuel leakage.	☐	☐
56. Rear Door Seals and Glass	Secure, clean and free of damage	☐	☐
57. Roadside Side Mirror	Secure, undamaged & adjustable	☐	☐
58. Ride Height/Leaning	Front & Rear Door Steps: 14 to 16" (Bus Horizontal)	☐	☐
59. Exterior Lights	Head/Tail/Brake/Directionals/Hi-Beams/Marker/ License Plate Lights all operational	☐	☐
60. Destination Signs	Front/Rear & Side signs provide identical & acceptable readout.	☐	☐
61. Hubodometer	Check for serviceability and security	☐	☐

62. Tire Condition

Record the Following	FRONT Left	FRONT Right	REAR Left Inner Outer	REAR Right Inner Outer
Tire Pressure (Front 115+/-3:Rear 105+/-3 psi)	____	____	____ ____	____ ____
Tread Depths (Front 4/32: Rear 2/32" Min.)	____	____	____ ____	____ ____

Battery Checks

Action Items:

⇨ Keep Engine "Off"
⇨ Hook-Up Battery Load Tester

Performance Checks:	**Check Criteria:**	**OK**	**NG**
63. Battery Load Test	Charge level "OK"; meter indicates "Good" or "Marginal" Battery	☐	☐
64. Battery Tray	Clean, secure and easy to pull out	☐	☐
65. Battery Cables & Terminals	Clean, secure. No signs of corrosion or damage.	☐	☐

Engine Checks

Action Items:

⇨ Pressurize Cooling system (9 psi)
⇨ Keep Engine "Off"

Performance Checks:	**Check Criteria:**	**OK**	**NG**
66. Rear Engine Start/Stop/Switch	Engine starts and stops as intended	☐	☐
67. Engine Compartment Lights	Operable; switch hardware intact	☐	☐
68. Radiator and Charge Air Cooler	Clean & free of obstructions and damage	☐	☐
69. Power Steering Reservoir	Level "OK." Indicate quantity added if low: ____ Qts.	☐	☐
70. Coolant System Integrity	Pressurization held; no leaks, loose clamps, rubbing lines	☐	☐
71. Air Intake Hoses & Clamps	Must be secure/no chafing, rubbing or damaged hosing	☐	☐
72. Hydraulic/Transmission Hoses/Lines	Must be secure/no chafing, rubbing or damaged hosing	☐	☐
73. Fire Suppression Hoses/Nozzles	Secure and intact. Nozzle endcap in place	☐	☐
74. Alternator and Hydraulic Pumps	Secure and no indication of leakage	☐	☐
75. Engine and Accessory Belts	Belts show no signs of wear, splitting or fraying	☐	☐
76. Alternator and Starter Connections	Cables and terminals secure and free of corrosion	☐	☐
77. Exhaust System Integrity	Secure & intact; free of damage; no signs of exhaust leakage	☐	☐
78. Wiring, Harness and Tie-Downs	Secure & intact; wires not subject to heat or vibration damage	☐	☐
79. Fan and Fan Shroud	Secure & intact; free of damage	☐	☐

PREVENTIVE MAINTENANCE INSPECTION - SHEET 4

INSPECTION TYPE A B C					
Bus Number		Date:			

Undercarriage Checks

Action Items:

- ⇨ Keep Engine "Off"
- ⇨ Raise and Support Bus with Safety Stands
- ⇨ Drain all Air Tanks until Free of Contaminants

Performance Checks:	**Check Criteria:**	**OK**	**NG**
80. Miter Box and Steering Linkages	Securely mounted and no sign of leakage	☐	☐
81. Steering Linkages	No excessive play or damage; all boots in-place	☐	☐
82. Defroster Valve	Filter clean and no indication of leakage	☐	☐
83. Suspension System	Shock absorbers & air bags secure and tight; no air leakage	☐	☐
84. Ride Leveling System	Leveling links, airlines & leveling valves intact; no air leakage	☐	☐
85. Hoses/Pipes/Clamps/Wiring	Secure & intact; no splitting, rubbing or corrosion	☐	☐
86. Axle, Radius Rods & Bushings	No cracks, movement or excessive rust; all rubber intact	☐	☐
87. Air Tanks, Fuel Tanks & Hardware	Secure & free of damage. No leakage/excessive contamination	☐	☐
88. Chassis Structure & Underbody	No cracks or excessive rust in welds or steel supports	☐	☐
89. Driveshaft/U-Joints	Secure. No excessive rust	☐	☐
90. Bulkhead Electrical Connections	Secure. No corrosion or frayed wires	☐	☐
91. Differential Oil Level	Filled. No signs of leakage, cracks or excessive rust	☐	☐
92. Engine and Transmission Housing	No oil leaks, cracks or other visible damage.	☐	☐
93. Engine & Transmission Cradle Mts.	Secure & intact. No splits or cracks in rubber material.	☐	☐
94. Fire Suppression Agent Bottle	Secure & charged; actuator head wiring secure & intact	☐	☐

Engine Oil and Filter Change

Action Items:

- ⇨ Keep Engine "Off"
- ⇨ Keep Bus Supported with Safety Stands
- ⇨ Remove Oil Pan Drain Plug
- ⇨ Drain Oil into Oil Collection Tank and Obtain Sample for Later Analysis
- ⇨ Remove Old Oil Filter and Replace with New One
- ⇨ Fill Engine Oil Pan with Proper Amount of Oil (after lowering bus)

Performance Checks:	**Check Criteria:**	**OK**	**NG**
95. Drain Plug	Inspect for excessive metal fragments and clean	☐	☐
96. Removed Oil	Inspect oil for contaminant, water, antifreeze, fuel and metal fragments	☐	☐
97. Plug and Pan Treads	Inspect for serviceability	☐	☐
98. Engine Oil Pan, Filters & Lines	Start engine and check for oil leaks	☐	☐
99. Engine Oil Level	Turn off engine and check for proper oil level	☐	☐

Kingpins

Action Items:

- ⇨ For Portable Type Lifts: Lower front end of bus so it is supported entirely by safety stands
- ⇨ For Axle Support Lifts: Place a pinch-bar in the lowest vent hole of the front wheels

Performance Checks:	**Check Criteria:**	**OK**	**NG**
100. Kingpins	Check for excessive up & down and side-to-side play	☐	☐

PREVENTIVE MAINTENANCE INSPECTION - SHEET 5

INSPECTION TYPE A B C					
Bus Number		Date			

Brakes

Action Items:

- ⇨ Release Parking Brake & Actuate Service Brakes (w/air system at 90 to 100 psi)
- ⇨ Measure Brake Lining Wear. Check for any Air Leakage.

Performance Checks:	**Check Criteria:**	**OK**	**NG**
101. Air System Integrity	Any indication of leakage	☐	☐
102. Brake Shoe Movement (Wedge Brakes Only)	Brakes fully apply and retract with each application	☐	☐
103. Brake Throws (S-Cam Brakes Only)	Front: 2.0" max. Rear: 2.5" max. (Orange "Warning" band on Push-rod is NOT visible)	☐	☐
104. Brake Shoe Pad Depth (min. 3/8")	Front Right: ____ Left: ____ / Rear Right: ____ Left: ____		
105. Parking Brake Extension (if applicable)	Engaged: 10.5" to clevis pin. Disengaged: 12" to clevis pin. Lining clearance: 0.010 to 0.015"	☐	☐
		—	—

Wheels/Miscellaneous

Action Items:

- ⇨ Lower Bus from Lift
- ⇨ Torque Wheel Lug Nuts as Follows: Front: 500 ft.-lbs., Rear: 550 ft.-lbs.

Performance Checks:	**Check Criteria:**	**OK**	**NG**
106. Wheel Integrity	No excessive rust or noticeable cracks in wheels	☐	☐
107. Lug Nuts	No missing lug nuts	☐	☐
108. Other		☐	☐

DEFECT SHEET

INSPECTION TYPE A B C						
Bus Number		Date				

Defects

Action Items:

- List Checklist Number from the PMI Forms
- Provide Written Description of the Defect Found

Item	**Defect Description**

GMC/RTS/NOVA
BODY DAMAGE DIAGRAM

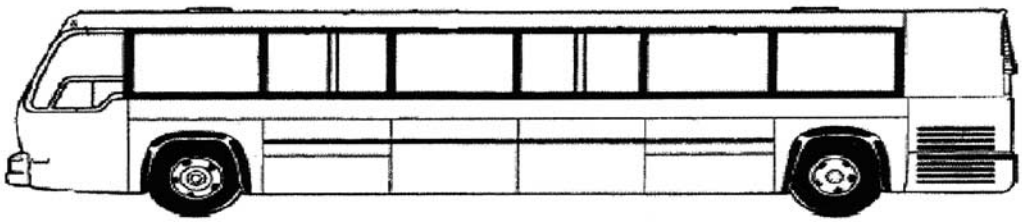

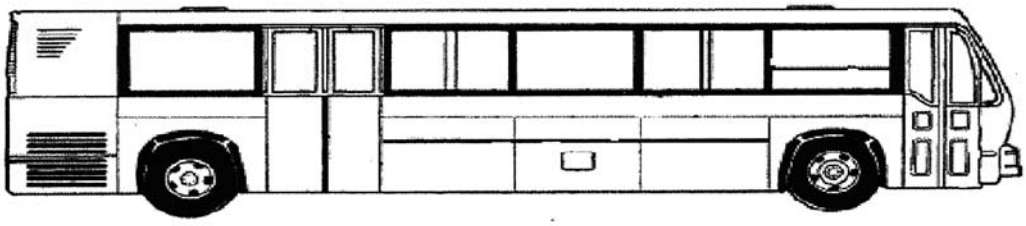

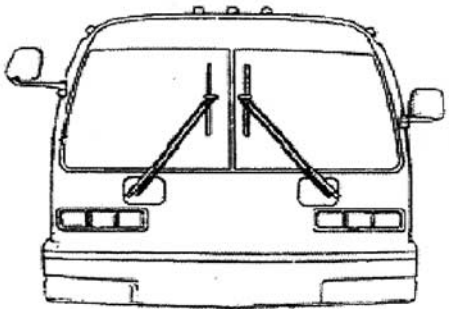

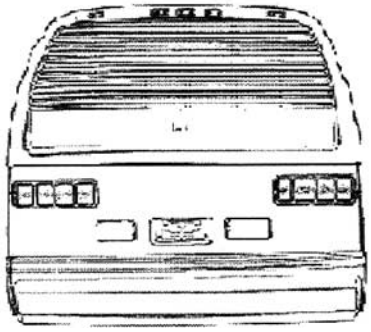

SAMPLE MAINTENANCE PRACTICE #2

Bus PMI; 2003 STARTRANS Senator, 20-Ft.; Ford E-350 Chassis

This sample practice was prepared in cooperation with RADAR, Unified Human Services Transportation Inc., Roanoke, VA, and is based on their General Inspection Sheet and maintenance manuals provided by Supreme, Ford, and Haynes.

Date March 20, 2005 (Original Issue)

Legal Disclaimer/Source

The following disclaimer is used when this practice is posted on the TRB Maintenance Practices Web Board; remove for internal agency use:

> The information contained in the published content is provided as a service to the bus transit community and does not constitute advice. Every attempt was made to provide quality information for the purposes outlined for this project, but we make no claims, promises, or guarantees about the accuracy, completeness, or adequacy of the content. Maintenance advice must be tailored to the specific circumstances of each agency. Because bus maintenance practices can change without notice, nothing provided herein should be used as a substitute for the advice of competent mechanics and/or maintenance crews.

Objective/Purpose

This maintenance practice is used in conjunction with the attached Inspection Sheet and provides instructions for performing a Preventive Maintenance Inspection (PMI) on a STARTRANS 20-foot Senator bus built by Supreme on a Ford E-350 chassis.

Summary of Local Conditions

- Buses operate in Demand Response Service in urban, suburban, and rural areas, including city streets and hilly neighborhood roads.
- PMIs are performed in a central maintenance facility without pits or in-ground lifts. Inspections are done with floor jacks and jack stands.
- Winter operation includes ice and snow. Summers are typically hot and humid.

Special Tools

Torque Stick, 140 lb-ft MAC Tools – Wheel Torque Extension Kit

Safety Precautions/Applicable Regulations

- Wear proper eye and hand protection.
- Attach exhaust hose to bus exhaust system when operating indoors.
- Use safety stands (jack stands) to support vehicle.
- This practice was written to comply with United States Department of Transportation (USDOT) requirements; CFR 49 Part 393 and CFR 49 Part 396

Hazardous Materials

Use special containers to properly dispose of waste oil and filters because they are classified as hazardous materials. Use latex gloves when handling waste oil and filters.

Step-by-Step Procedures (5,000-mile PMI interval)

The inspection technician must use the attached Preventive Maintenance Inspection (PMI) Sheet along with the instructions provided below:

1. The bus engine compartment and undercarriage must be steam cleaned and allowed to cool prior to starting the inspection.
2. Record the bus number, date of inspection, inspection due date, and bus mileage on the attached Inspection Sheet.
3. The inspection steps shown on the PMI Sheet must be followed in the order shown.
4. For each inspection item, check the “Good” or “No Good” column and initial. If an inspection item is found to be “No Good,” a description of the problem must be noted. If corrections are made, that should be noted as well.
5. Where measurements are requested, record the measured values.
6. The completed PMI Sheets are then filed with the appropriate bus records file.

Preventive Maintenance Inspection (PMI) Sheet
2003 STARTRANS Senator, Ford E-350 Chassis

Bus Number_____ Date Inspection Due ___/____/_____ Date Inspection Complete ___/____/_____ Mileage _____

Operator Controls Checks

		Good	No Good	Mech.Init.
Dash lights/dimmer	Must operate properly			
Dash telltale lamps	Must be on in test mode			
Voltage gauge reading	13.8 ± 0.3 volts			
Passenger door, seals & dome lamp	Must operate properly, clean & seals properly, lubricate hinges and opening mechanism			
Operator door	Check alignment, latch and seals, lubricate hinges and latch			
Operator door window	Check for proper operation and damage			
Horn & flashers	Must operate properly			
Steering wheel tilt	Must operate properly			
Operator stanchions	Present, secure			
Operator seat	Must be fully adjustable, all hardware and controls intact, check seat mounting bolts are tight			
Operator seat belt	Must be adjustable, retract and latch properly, inspect for damage			
Sun visor and registration	Present, secure			
Fire extinguisher	Present, secure & charged within green zone			
Flares and reflective hazard kit	Check contents and replenish as required			
First Aid kit	Check contents and replenish as required			
Interior mirror	Present, secure & adjustable			
Driver's side mirror	Present, secure, adjustable & undamaged			
Curb side mirror	Present, secure, adjustable & undamaged			
Windshield	Clean and inspect for damage			
Wipers/wiper blades	Proper operation, blade edges not worn or damaged			
Windshield washer	Check operation, proper spray pattern, fill reservoir			
Back-up alarm	Must be audible from driver's seating area			
Fast idle switch	Check for proper operation			
Defroster & frt heater blower	Check by turning on fan and defroster with engine running (fall & winter)			
Front heater	Check operation with engine running (winter)			
Air conditioning - operator	Check by turning on A/C and control to cool (summer)			

Interior Checks

Interior lights	All lights operational, light panels in place & secure			
Roof hatch	Secure, opens, closes and seals properly			
Passenger stanchions	Secure and not damaged			
Passenger seats	Secure, clean & free from damage (tears, cuts, graffiti, gum); check for loose fasteners and mounting bolts			
Windows	Secure, proper operation & no excessive damage			
Passenger door operation	Check operation, open then close door			
Passenger door seals	Inspect for damage			
Heater - passenger compartment	Check operation using temperature and fan control (fall & winter)			
Step well	Check for clean, no loose treads			
Step well lights	Check operation and clean			
Step well heater	Check for proper operation (winter)			
A/C – passenger compartment	Check operation, turn A/C on and control to cool (summer)			
Floor covering/carpet	Check for wear, loose or excessive dirt			

Passenger door/brake interlock	Check by trying to move bus with passenger door open			
Emergency exit door	Check for proper operation and latch properly			
Emergency exit warning lights	Check for proper operation			

Wheelchair Lift and Restraints

Wheelchair lift	Cycle lift and check operation, lubricate all moving parts			
Wheelchair lift/brake interlock	Check by trying to move the bus with the wheelchair lift deployed			
Wheelchair restraints	Check for present, clean and operational			

External Checks

Head lights – high and low	Operational			
Tail lights, directional, marker, license plate, back-up, daytime running lights, four-way flashers	Secure, clean & operational			
Reflectors	Check for damage and clean			
Fuel cap	Present, secure and intact, no signs of leakage			
Body damage – outside panels & bumpers	Check for damage			
Exterior compartment doors	Check for damage, proper latching, lube hinges and check for looseness			

Wheels

Wheels	Check for excessive rust or noticeable cracks			
Wheel attachment	All studs and lug nuts present			
Wheel torque	Torque all lug nuts to 140 lb-ft (126 to 170 lb-ft)			

Tire Condition

All tires	Inspect tires for damage (bulges, cuts, punctures)			
Valve stems and caps	Check valve stems for damage and missing valve caps			
Rotate tires	Rotate as required			

Record tire pressure and tread depth	Front		Rear			
	Left	Right	Left		Right	
			(outer)	(inner)	(outer)	(inner)
Tire pressure (front 65 psi, rear 60 psi)						
Tread depth (front x/32", rear x/32" min) (check visually)						

Engine Compartment

Accelerator linkage	Check for binding, free operation, excessive play			
Air intake - check air filter and replace as required	Check for extreme dirt or restriction			
Engine oil	Dipstick present and oil level proper			
Radiator fluid level	Check for full			

Anti-freeze	Add only 50/50 mixture as required			
Radiator cleanliness	Clean, free of obstructions			
Leaks, oil, fuel, water	Check for any leaks			
Fuel filter	Check for leaks and restriction			
Electrical wiring, harnesses and tie-downs, battery cables and terminals	Check for loose or corroded terminals, loose wiring and tie-downs, chafing, rubbing or frayed wiring			
Battery mounting	Check hold down clamps, tight and good condition			
Transmission fluid	Dipstick present and fluid level proper			
Brake fluid	Check for proper fluid level			
Power steering fluid	Check for proper fluid level			
Windshield washer fluid	Check for proper fluid level			
Belts	Check all belts for looseness and proper tension. No signs of wear or fraying			

Air Conditioning System

A/C compressor	Check compressor and platform mounting bolts for tightness			
A/C compressor belt	Check condition and tension			
A/C compressor clutch	Check for signs of overheating or slippage			
A/C compressor clutch	Check wiring harness			
A/C system	Inspect hoses and clamps, check for leaks, check receiver tank sight glass, check refrigerant charge			
Condenser fan	Inspect fan blades for damage and proper tip-to-shroud clearance			
Evaporator	Check air temperature in and out. ΔT should be 15-20 °F			
Evaporator fins	Clean coils and straighten bent fins			
Refrigerant valves	Inspect cap seals for damage and valve caps for tightness			
Evaporator blower motor	Check fan wheel alignment and mounting bolts for tightness			
Refrigerant pressure	Check with manifold gauge			

Chassis

Steering system	No excessive play or damage			
Suspension system	Shock absorbers intact and no signs of leakage. Springs and mounting satisfactory			
Axles, radius rods & bushings	No cracks, movement or excessive rust. All rubber intact.			
Chassis structure/underbody	No cracks or excessive rust in welds or supports			
Driveline and U-joints	Secure. No excessive rust.			
Differential	Full. No signs of leaks, cracks or excessive rust.			
Hoses/pipes/clamps/wiring	Secure and intact. No chaffing rubbing or corrosion			
Engine & transmission housings	No leaks, cracks or visible damage.			
Engine & transmission mounts	Secure and intact. No splits or cracks in rubber material.			
Exhaust system	Inspect for damage, leaks, loose parts and debris trapped by exhaust system			
Brake system	Check lines and brake assembly for leaks			
Brake lining and rotors	Visually inspect rotors and pads			

SAMPLE MAINTENANCE PRACTICE #3

Title
Component PMI; Thermo King Model T11-M85 AC with IntelligAIRE II; 2004; Gillig, 30-foot low floor

Agency Name
This sample practice was prepared with assistance provided by the Potomac and Rappahannock Transportation Commission (PRTC), Woodbridge, Virginia, and is based on service information and manuals provided by the Thermo King Corporation.

Date
March 1, 2005 (Original Issue)

Web Board Disclaimer
The following disclaimer is used when this practice is posted on the TRB Maintenance Practices Web Board; it is not intended for internal agency use.

> The information contained in the published content is provided as a service to the bus transit community, and does not constitute advice. Every attempt was made to provide quality information for the purposes outlined for this project, but we make no claims, promises, or guarantees about the accuracy, completeness, or adequacy of the content. Maintenance advice must be tailored to the specific circumstances of each agency. Because bus maintenance practices can change without notice, nothing provided herein should be used as a substitute for the advice of competent mechanics and/or maintenance crews.

Copyright Information
The information contained in this maintenance practice is based on copyrighted information provided by the Thermo King Corporation as contained in their maintenance and service manuals. Permission to use the copyrighted material was granted by the Thermo King Corporation.

Objective/Purpose
The purpose of this PMI is to determine the state of readiness of the air conditioning system and to identify any defects needing repair. The technician is authorized to make a repair if it will take 15 minutes or less for each defect identified. Repairs taking more than 15 minutes must be noted on the attached Defects and Parts Record Sheet and will be done as a scheduled repair activity. This PMI is to be performed at 6,000-mile intervals in conjunction with the standard 6,000-mile Bus PMI.

Glossary of Terms
AC—Air Conditioning System
PMI—Preventative Maintenance Inspection

Summary of Local Conditions

- Inspectors are allowed to make any repair estimated to take 15 minutes or less; otherwise, defects are noted and scheduled for repair at a later time.
- The agency experiences mild winters and long hot humid summers.
- The AC system is kept operational all year.

Parts

- Air Filters—Thermo King 91-6291
- Protective Cap—Thermo King 306-115

Additional Information Available

The following troubleshooting and repair procedure manuals for the AC system can be found in the Supervisor's Office to provide additional information if needed:

- Thermo King—Maintenance Manual T11 M85 (02/01/05)
- Thermo King—X426, X430 Compressor Overhaul for Bus Air Conditioning
- Thermo King—Operator's Manual SMART Pac Software for IntelligAIRE II
- Thermo King—Parts Manual T11 M85
- Thermo King—Tool Catalog TK5955-0-MS (04/03)

Time Standard

None

Special Tools

Thermo Cycle Vortex Tester—Thermo King Tool 204-949

This tool provides hot or cold air for testing sensors.

Attach the hot/cold air to a compressor and it will blow hot air out one orifice and cold air out the other. Use it for cycling the thermostat by aiming it at the sensor bulb.

204-949 Hot/Cold air gun

Thermometer (-40 to + 160 F)—Thermo King Tool 204-233

Handy pocket thermometer for quick temperature checks.

204-233 Thermometer (-40 to 160 F)
204-448 Thermometer (-40 to 70 C)

Safety Precautions/Applicable Regulations

- Keep your hands, clothing and tools clear of fans, pulleys, and drive belts when working on an AC unit that is running. Loose clothing can get entangled in this moving equipment, causing serious injury or possible death.
- Regulations require that goggles/safety glasses and gloves be worn when working around AC systems or batteries. Refrigerant, oil, and battery acid can permanently damage your eyes.
- Use extreme caution when adding coolant to a hot engine; release pressure slowly to prevent hot fluid from escaping quickly, which can burn skin and eyes.
- Do not use a torch when working on AC systems. When a flame comes in contact with refrigerant, toxic gases are produced that might cause suffocation or even death.
- Regulations require that refrigerant (including R-134a) be recovered and recycled using a certified recovery system, that the equipment be operated by a licensed employee, and that any refrigerant added to the AC system be tracked and inventoried. As a result of this regulation:
    - Only certified technicians are allowed to perform this PMI.
    - Refer to the practice on Recycling and Replacement of Refrigerant if needed.
    - Any refrigerant used must be logged into the attached Defects and Parts Record Sheet in the space provided.
- The agency contracts with an outside firm to audit maintenance performance and will check agency records to verify if licensed personnel are performing AC PMIs.

Hazardous Materials

All refrigerant, including R-134a, is considered a hazardous material. The refrigerants can cause freezing of skin and eyes. Avoid contact and always wear eye and hand protection. Refer to the practice on Recycling and Replacement of Refrigerant if needed for additional information.

Procedure

1. Set parking brake. Start and warm up engine to full operating temperature. Shut off engine. Open engine compartment door and set Ignition Select switch to the "OFF" position.

2. Open rear AC compartment door and converter door, and swing open compressor belt guard.

3. Open evaporator filter panel. Remove filters and check evaporator for cleanliness. Clean as necessary. Replace filters.

4. Open interior AC panel cover. Using the pressure gauges (located in the lower left of the interior evaporator compartment) record static pressures below. Compare readings to Thermo King temperature/pressure relationship chart (provided below) according to the current ambient temperature for R-134a. Pressures should equal those indicated by ambient temperature. Elaborate on any defects on attached Defects Record Sheet.

Record Readings

Ambient Temperature _____°F
Static Suction _____PSIG
Static Discharge ___PSIG

Temperature Pressure Relationship Vapor Pressure, psig				
F	C	R-22	R-134a	R-407C
52	11.1	87.5	47.3	80.4
54	12.2	91.0	49.7	83.9
56	13.3	94.5	52.1	87.4
58	14.4	98.0	54.5	91.0
60	15.6	101.6	56.9	94.8
62	16.7	105.5	59.6	98.6
64	17.8	109.5	62.4	102.5
66	18.9	113.4	65.1	106.5
68	20.0	117.4	67.9	110.7
70	21.1	121.4	70.7	114.9
72	22.2	125.8	73.8	119.3
74	23.3	130.2	76.9	123.7
76	24.4	134.7	80.1	128.3
78	25.6	139.1	83.2	133.0
80	26.7	143.6	86.4	137.8
82	27.8	148.5	89.9	142.7
84	28.9	153.5	93.5	147.8
86	30.0	158.4	97.0	153.0
88	31.1	163.4	100.6	158.3
90	32.2	168.4	104.2	163.7
92	33.3	173.9	108.2	169.2
94	34.4	179.4	112.2	174.9
96	35.6	184.9	116.2	180.7
98	36.7	190.4	120.2	186.7
100	37.8	195.9	124.3	192.8
102	38.9	201.9	128.9	199.0
104	40.0	208.0	133.3	205.3
106	41.1	214.1	137.8	211.9
108	42.2	220.2	142.3	218.5
110	43.3	226.3	146.8	225.3

5. Inspect liquid line indicator in AC compartment for moisture content. Record color below.

   Green (dry) _____ Yellow (wet) _____

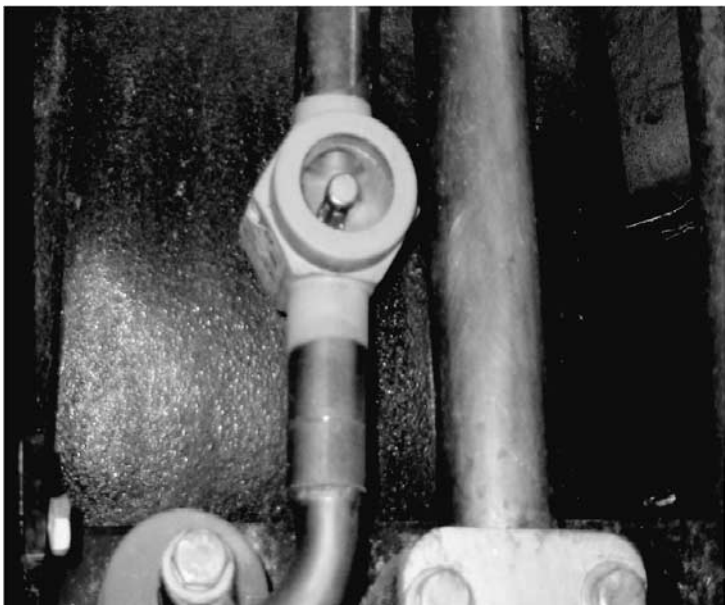

6. Inspect compressor clutch for evidence of wear, overheating, and broken friction plate or springs. Inspect for leaks at front compressor seal. Mark as acceptable or defective. Elaborate on any defects on attached Defects Record Sheet.

   Clutch Condition: Acceptable_____ Defective_____

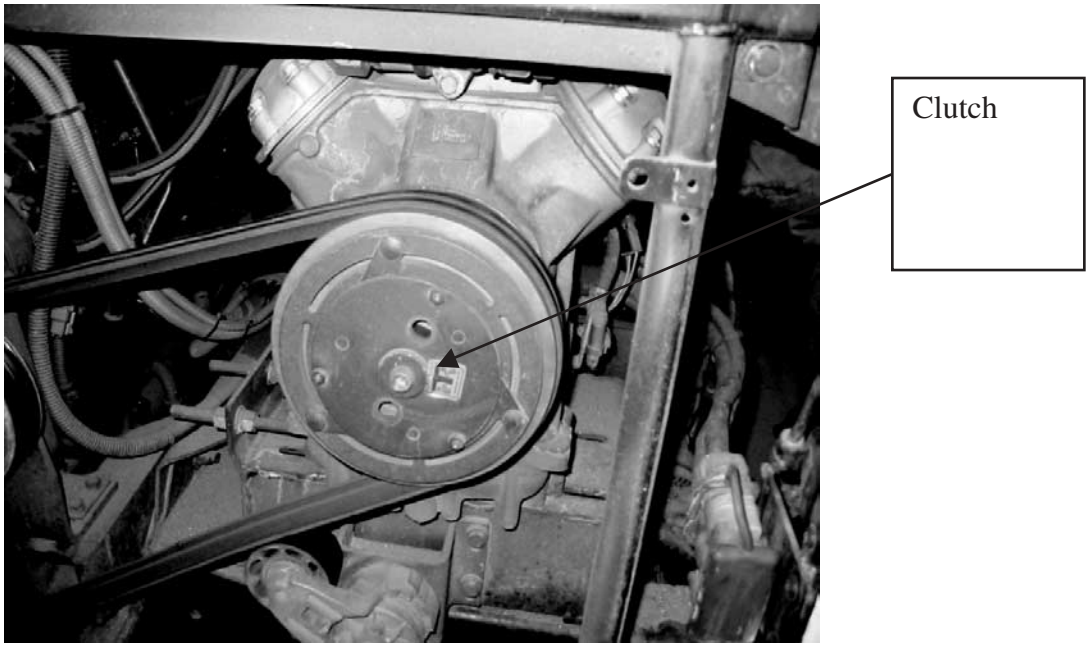

Front Seal Condition: Acceptable_____ Defective_____

7. Inspect compressor-mounting flange and bracket for cracks. Inspect pivot for damage or loose/missing bolts. Mark as acceptable or defective. Elaborate on any defects on the attached Defects Record Sheet.

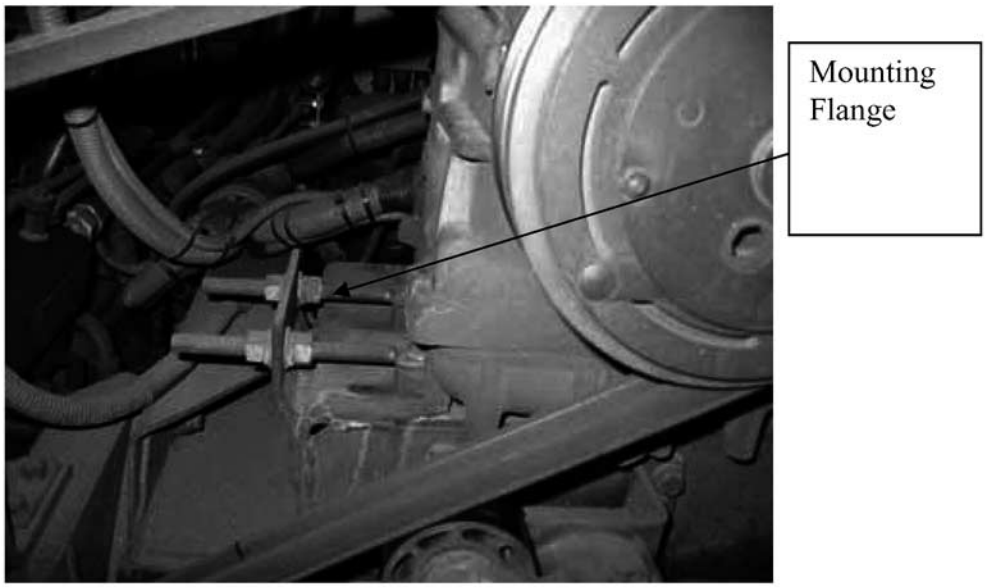

Mounting Flange: Acceptable _____Defective_____

Loose/Missing Bolts: Acceptable_____ Defective_____

8. Inspect compressor drive belt and belt tensioner pulley for wear, tension, and alignment. Mark as acceptable or defective. Elaborate on any defects on the attached Defects Record Sheet.

   Belt Condition: Acceptable ____Defective____

   Belt Tensioner Pulley: Acceptable____Defective____

9. Inspect all electrical harnesses and refrigerant lines around compressor area for rubbing, chafing, or corrosion. Ensure that the wire connections are secure at pressure switches. Mark as acceptable or defective. Elaborate on any defects on the attached Defects Record Sheet.

   Acceptable___ Defective___

10. Inspect for proper engine coolant level (Warning: If adding coolant, release pressure slowly when hot). Visually inspect the entire AC unit, evaporator/ heater coil compartments, and connecting lines for evidence of any engine coolant leaks. Mark as acceptable or defective. Elaborate on any defects on the attached Defects Record Sheet.

    Acceptable___ Defective___

11. In the engine compartment, close the compressor belt guard and place the Ignition Select switch to the "REAR" start position. (Note: Interior temperature must be between 60º and 76ºF; if less than 60ºF, start up the engine and turn on interior heat until the temperature is between 60º and 76ºF). Turn off heat and turn on the AC system at driver's control panel.

12. At driver's position, operate the engine at fast idle speed. Run AC system for 15 minutes before recording readings**.** Using pressure gauges installed in the lower left of the interior evaporator compartment, record pressures and temperatures at both idle and fast idle speeds.

Engine at Idle Speed
Suction _____PSIG
Discharge _____PSIG

Engine at Fast Idle Speed
Suction _____PSIG
Discharge _____PSIG

Ambient Temperature _____°F
Return Air Temperature ___°F
Delivery Air Temperature ___°F

13. In the AC compartment, inspect the refrigerant level in the receiver tank sight glass. Refrigerant level should be between ½ and ¾. Record level:

Refrigerant Level: _____

14. Inspect protective caps on service valves. Replace any missing caps.

15. In the converter door area, inspect compressor oil level and color in compressor oil sump sight glass. Oil level should be between ½ and ¾. Record level and color:

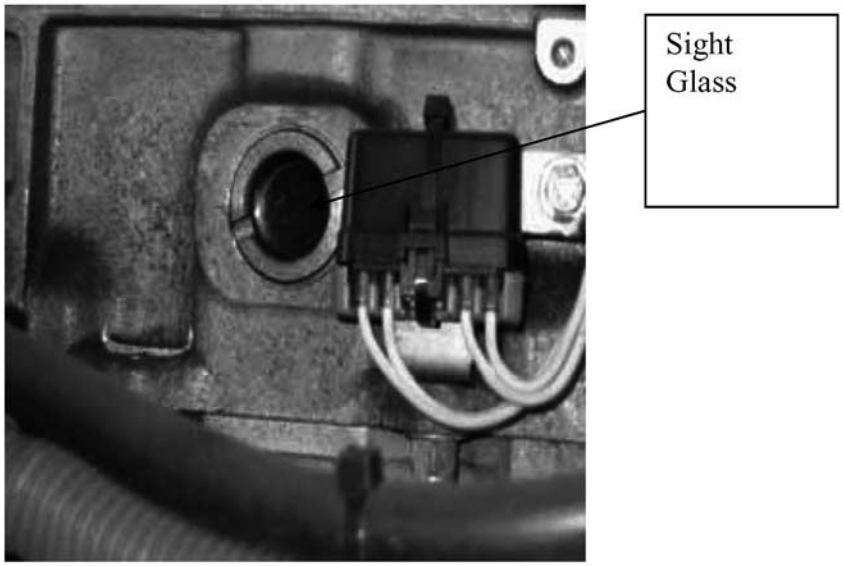

Oil Level_____

Oil Color: Amber: ____ Black or Metallic Gray____ Brown: ____

16. In bus interior, use the Thermo Cycle Vortex Tester (Thermo King Tool 204-949) to check return air thermostat function by raising and lowering return air thermostat temperature to cycle unit in heat, cool, reheat, and vent operating modes. Inspect for abnormal noises and vibration of condenser and evaporator motors, compressor, and clutch. Mark as acceptable or defective. Elaborate on any defects on the attached Defects Record Sheet.

Acceptable: _____ Defective: ____

17. In bus interior, place the IntelligAire II Display Module in the "RT" Relay Test mode. The Relay Test manually energizes relay outputs one at a time, allowing relays to be latched on for diagnosis.

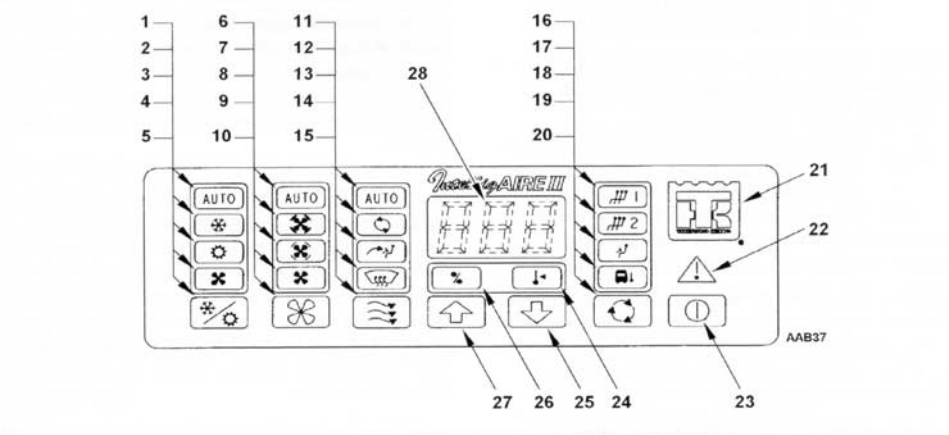

1.	Auto Mode Indicator	15.	**Damper Select** Key
2.	Cool Mode Indicator	16.	Passenger Zone 1 Return Air Temperature Indicator
3.	Heat Mode Indicator	17.	Passenger Zone 2 Return Air Temperature Indicator
4.	Vent Mode Indicator	18.	Driver's Zone Return Air Temperature Indicator
5.	**Operating Mode Select** Key	19.	Ambient Air Indicator
6.	Auto Fan Speed Indicator	20.	**Display, Select** Key
7.	High Fan Speed Indicator	21.	**Thermo King Logo** Key
8.	Medium Fan Speed Indicator	22.	Warning Indicator
9.	Low Fan Speed Indicator	23.	**On/Off** Key
10.	**Fan Speed Select** Key	24.	Setpoint Indicator
11.	Auto Damper Indicator	25.	**Down Arrow** Key
12.	Recirculate Mode Indicator	26.	Percent Indicator
13.	Driver's Panel Air Indicator	27.	**Up Arrow** Key
14.	Defrost Indicator	28.	LED Display

a) To initiate the Relay Test, press either the up or down arrow key when (RT) appears in the display. When initiated, the Relay Test turns on the first relay.
b) To scroll through the relay tests, press either the up or down arrow key. The output on the digital display is turned on and all other outputs are turned off. Consult the unit schematic diagram to determine what component(s) are controlled by each output. Note: The controller has time limits for outputs that can cause damage if left on too long.
c) To exit the Relay Test at any time, press the Display Select key.

Ensure that the main and sidewall water valves are opening and closing when the unit cycles on/off (lines should be warm when operating) and check coolant booster pump seal for evidence of leaks. Mark as acceptable or defective. Elaborate on any defects on the attached Defects Record Sheet.

Acceptable: _____ Defective: _____

18. At driver's area, visually and audibly inspect:

    Driver's booster fan operation. Mark as acceptable or defective.

    Acceptable: _____Defective: _____

    Defroster fan high and low speed operation. Mark as acceptable or defective.

    Acceptable: _____ Defective: _____

    Front water valve condition and operation. Mark as acceptable or defective.

    Acceptable: _____ Defective: _____

    Record defroster duct outlet temperature: _____°F

    Elaborate on any defects on the attached Defects Record Sheet.

19. In the engine compartment, place starter Ignition Select switch to "FRONT" start position. Close all panels, compartment, and access doors.

20. Complete Defects Record Sheet and return all material to your Supervisor.

Inspection performed by: _____

Employee #: _____

Date: _____

AC System

Defects and Parts Record Sheet

Bus number_____

List remaining defects:

1)_____

2)_____

3)_____

4)_____

5)_____

Record all parts used:

Part No. Description Quantity

1)_____

2)_____

3)_____

4)_____

5)_____

Record Refrigerant used: Pounds_____

Repairs performed by:_____

Employee #: _____

Employee Certification #: _____

Date:_____

SAMPLE MAINTENANCE PRACTICE #4

Title

Electrical; Repair; All buses

Agency Name

This sample practice was prepared with assistance provided by the Potomac and Rappahannock Transportation Commission (PRTC), Woodbridge, Virginia, and is based on service information and manuals provided by several sources, including TMC Recommended Practice 129, Heavy-Duty Vehicle System Wiring Checks: 12-Volt Charging, 12-Volt Cranking; and electrical training material provided by the Thermo King Corporation.

Date

February 1, 2005 (Original Issue)

Web Board Disclaimer

The following disclaimer is used when this practice is posted on the TRB Maintenance Practices Web Board; remove for internal agency use:

> The information contained in the published content is provided as a service to the bus transit community, and does not constitute advice. Every attempt was made to provide quality information for the purposes outlined for this project, but we make no claims, promises, or guarantees about the accuracy, completeness, or adequacy of the content. Maintenance advice must be tailored to the specific circumstances of each agency. Because bus maintenance practices can change without notice, nothing provided herein should be used as a substitute for the advice of competent mechanics and/or maintenance crews.

Copyright Information

The majority of information contained in this maintenance practice is based on illustrations and material provided by the Thermo King Corporation in their electrical training manuals. Permission to use the copyrighted material was granted by the Thermo King Corporation. TMC Recommended Practice 129 was used as reference material only.

Objective/Purpose

The purpose of this practice is to provide an introduction to electrical circuit failures and meter usage. It also outlines general electrical troubleshooting and repairs. This practice can be applied to all buses and covers power source and component wiring for 12 and 24

volts direct current (VDC) applications. Additional repairs may require the use of specific tools, repair connectors, and specific techniques. Consult specific component manuals and user instructions for these cases.

Glossary of Terms and Abbreviations

A: Amp
Conductor: Element of the wire (typically copper) that carries electrical current
DC: Direct Current
Heat gun: Electrical tool to heat-shrink tubing on connections/terminals
Prod: Positive and negative probe of VOM test instrument used to conduct electrical tests. They are also referred to as leads.
V: Volt
VDC: Volts Direct Current
VOM: Volt/Ohm/Milliammeter; also known as "multimeter"
Wire Crimper: Tool to crimp connector/terminals onto wire conductors
Wire Striper: Tool to strip insulation from ends of wires without damaging conductor

Summary of Local Conditions

Not applicable.

Parts

Shrink tubing, wire, and connectors as needed.

Time Standards

Not applicable.

Special Tools

VOM: An electrical testing device that combines a voltmeter, an ohmmeter and a milliammeter (ammeter) into a single "multimeter" instrument. There are two types. The first is an electro-mechanical meter using a moving coil. This type, while accurate, is fragile and prone to damage. The second and preferred type is an electronic (digital) meter that is more accurate and durable. This practice will describe the use of the digital VOM. A typical digital VOM is shown below. (For those with Internet access, visit the http://us.fluke.com/VirtualDemos site for an interactive demonstration of how to use a digital VOM).

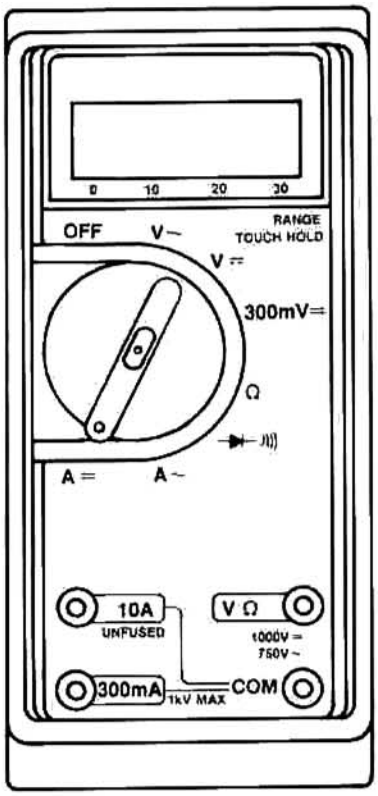

Illustration used with permission from the Thermo King Corporation.

Clamp-on Ammeter: The clamp-on ammeter is used as a stand-alone instrument or as an attachment to a VOM to measure current in a conductor by surrounding the conductor (wire) to measure the magnetic field around it.

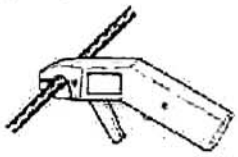

Illustration used with permission from the Thermo King Corporation.

Safety Precautions

- Always be aware of the potential danger to yourself and equipment when working with energized (activated) electrical circuits.
- There is a possibility of receiving a damaging electrical shock created by contacting energized circuits; always try to work with de-energized circuits if possible.
- Work with only one hand when power is on.
- If readings must be made of an energized circuit, make connections on the de-energized circuit first and then energize the circuit when taking the readings.

- Always wear safety-approved shoes, eye protection, and gloves when working on electrical equipment.
- Insulate yourself from earth ground by using an insulating floor mat.
- *Do not use jumper cables or test lamps* as substitutes for VOMs. They can easily damage electronic circuits and equipment.

Procedures

The procedures below describe:

- Circuit defects;
- Troubleshooting procedures (identification of defects); and
- Repairs (correcting defects found during troubleshooting).

Circuit Defects

When components like lamps, motors, or other electrical devices fail to operate as commanded (i.e., when switched on or off), there is a defect either in the circuit external to the device or in the device itself. External circuit defects can be in the power source (battery or alternator), connecting wires, or terminals/connectors. Defects to the electrical device can be due to worn/defective internal components, such as brushes, diodes, and lamps.

Typical circuit failures are caused by an Open, Ground, or Short condition.

- An Open circuit is a break—such as a broken wire, terminal, or connector—that stops current flow.
- A Ground circuit results when a conductor or device contacts a portion of the bus that is at ground potential (i.e., ultimately connected to the ground side of battery). This circuit results in excessive current flow and usually trips fuses or breakers, which cuts power to the circuit to prevent serious damage.
- A Short circuit is when two separate conductors (with at least one having power) make unintentional contact. The circuit results are similar to a Ground circuit.

Typical circuit defects are shown below:

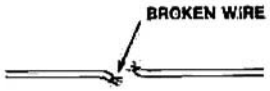

OPEN

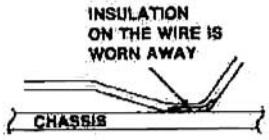

GROUND

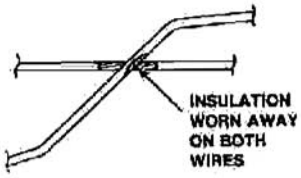

SHORT

Illustrations used with permission from the Thermo King Corporation.

Troubleshooting Procedures (Identification of Defect)

1. Background. Circuits are created by using wires to connect electrical components to power (positive [+] side of battery) and ground (negative [-] side of battery). While all power and grounds are connected to the battery, some power [+] may be taken directly from the alternator, starter, relays or other components that are energized from the battery. Likewise, grounds may come from the chassis or other metal components that are ultimately connected to the battery (i.e., through grounding strap/cable).

- Voltage provides the electrical pressure or force that causes the electrical current (electrons) to flow through a circuit. Electrical voltage is measured in volts.
- Resistance is a restriction of current flow that can be detected by voltage decrease or loss in an electrical circuit. Electrical resistance is measured in ohms.
- Current is the flow or movement of electrons through the wires and can be compared to the flow of water through a pipe. Without pressure (voltage), however, current will not flow. Electrical current is measured in amps.
- Buses are either 12 or 24 volts direct current (VDC) or have a combination of both voltages.

2. General Instructions. It is critical to identify the defect before repairs are undertaken. When an electrical device (e.g., lamp, motor, or destination sign) does not operate properly, the defect that prevents operation must first be identified. Below are general procedures to determine if the power supply/ground circuits or the item of equipment is defective. It is important to review the electrical schematic diagrams of the subject circuits to determine the points in the circuit that should be used as test points. Typical test points are terminal strips, connectors, and the device itself. Obtain voltage, current, and resistance specifications for devices in the circuit to evaluate readings. If these procedures fail to identify the defect, then the manufacturer-specific maintenance and troubleshooting manuals must be consulted.

3. Visual Inspection.
Wires: look for broken, worn, or cracked insulation, or power conductors making contact with other conductors (power or ground). Wires should be supported or bracketed to prevent undue vibration and flexing.

Connections: look for frayed, corroded, loose or broken wires inserted into terminals. Also look for loose terminals and plug connectors. Note: poor connections can sometimes be hidden inside a connector and may not be obvious.

4. Use of Volt/Ohm/Milliammeter (Multimeter).

- The VOM is the only tool allowed to troubleshoot electrical circuits.
- Before conducting any tests, confirm that the bus power source is operating and is within the proper voltage range. If necessary, replace the battery with a fully charged unit.
- When working with direct current (DC) power sources typical in buses, care must be taken to observe polarity when taking measurements. Buses are usually negative ground. The color for negative VOM test lead (prod) is black. The color for positive test lead (prod) is red. Always observe the correct polarity when using the test prods; failure to do so may result in reversed measurement readings. The correct polarity is observed by connecting the red prod of the VOM to the positive (+) side of circuits and the black prod to the negative (-) side.

The VOM can provide the following three measurements. Additional detailed information on conducting the tests is provided later in this practice.

i) Voltage Measurements: Voltage is measured in volts. The testing procedure simply measures volts between two points in a circuit. Use the VOM test prods in parallel (see illustration below; black prod on [-], red prod on [+]) to measure voltage between selected points in a circuit. A circuit must be energized to measure voltage.

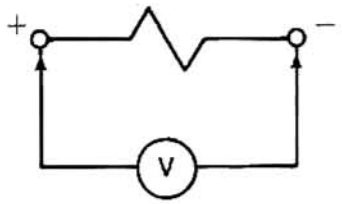

Illustration used with permission from the Thermo King Corporation.

ii) Current Measurements: Current is measured in amperes ("amps"), and the test measures the flow of amps in a circuit. Use the clamp-on ammeter (see illustration in "Special Tools" section above) to measure current in a conductor. The circuit must be energized to measure current.

iii) Resistance Measurements: Resistance is measured in ohms. Devices such as solenoids, resistors, and wires have specific resistance specifications. With conductors, such as wires, resistance depends on conductor length (longer wires have more resistance), conductor diameter (larger diameter means less resistance), conductor material (some materials conduct better than others), and temperature (resistance varies with temperature change). Tests are conducted to determine circuit restrictions such as opens ("breaks"), shorts, or grounded conditions. The circuit must be de-energized (off) to measure resistance. Use the VOM test prods in series (connected to two ends of the same wire, for example) to measure resistance of a component/wire segment. The component/wire segment must be disconnected and isolated from any other electrical sources.

5. Tests to Determine Defects. General test procedures are as follows.

Voltage Tests

i) Voltage/No Voltage Test: Since voltage is "electrical pressure," it must be present for current to flow and activate a device (e.g., light or relay). To test if voltage is present, energize (turn on) the circuit to be tested. Set the VOM selector to the correct VDC scale (12 or 24 VDC). Observe polarity: Touch the red (+) prod to the power side of the circuit and the black (–) prod to ground. No reading indicates an open in the circuit.

ii) Available Voltage Test: This test is used when a known voltage value (e.g., minimum 9 volts) is required to activate a component or system, and the procedure is the same as the Voltage/No Voltage test. Observe polarity. The reading must be within operating specifications for the device (e.g., 11-13 V). Readings over or under specifications indicate defects in power supply or wiring.

iii) Voltage Loss (Drop) Test: Whenever resistance occurs in a circuit, voltage is reduced. Some voltage drop is common in every circuit. However, unwanted resistances caused by poor connections, for example, will cause higher than normal voltage drop. A common example is a bad connection of a battery cable at the battery terminal. To make a voltage drop test, the circuit must be energized and under load (i.e., trying to do its job, such as cranking the engine). To use a VOM to check the negative battery cable connection at the

battery terminal, for example, set the VOM selector to appropriate VDC setting and touch the black test lead to the negative battery post, and the red lead to the negative battery cable terminal. Create a load by cranking the engine. If the connection is good, the meter will read near zero volts. A bad connection will read from ½ to 12 volts (in a 12 VDC battery).

The same test can be made to the power side of a circuit. To do so, energize (turn on) the circuit to be tested. Set the VOM to the lowest VDC setting. Warning: do not connect the VOM leads across an energized circuit unless the VOM volt selector is set for the correct voltage range. Touch the red (+) lead to the part of the circuit closest to the current source, usually the battery. Touch the black (–) prod to the terminal of equipment under load. The lower the voltage drop (difference between voltage at rest and voltage when equipment is under load) when under load, the better the connections and wire integrity.

If a high reading is found in either case, place the prods across each wire segment/item of equipment in the circuit to identify the exact defective item or connection.

Current Measurement

i) Current Measurement Test: An ammeter is used to measure the amperes of current flow in a circuit. To test, energize (turn on) the circuit to be tested. Set the VOM selector to the Amp position. Clamp the ammeter around the supply (+) wire and note reading. Compare the reading with device specifications. Low current can indicate a high resistance in the device or wiring. A high reading can indicate a short or short to ground.

Resistance Tests

i) Open Circuit Test: Testing for opens or breaks is also known as a continuity test. Each component has a specific resistance specification. Power must be de-energized before using an ohmmeter. Set the VOM selector to ohms. To test a resistor, for example, touch the prods to each side of the resistor. A reading in ohms above the specification typically indicates an open.

ii) Short/Grounded Circuit Test: De-energize (turn off) the circuit. Set the VOM selector to the ohm setting. Disconnect the load (lamp, motor, unit, etc.) from the circuit. Touch the red (+) prod to the power terminal and the black (–) prod to a known ground. If there is a short circuit, the meter will show a low resistance significantly below the specification. If there is no short circuit, the meter will show normal, at or near the specification level. If there is a grounded circuit (i.e., power terminal coming in contact with bus frame) the meter will read near 0 ohms, which would blow fuses or trip circuit breakers. You may have to isolate sections of the wiring/component in question to identify the location of the short/grounded circuit. It may be wires contacting directly to ground or contacting wires of another circuit. Consult wiring diagrams for possible short circuit paths.

Repairs (Correcting Defects Found during Troubleshooting)

Wires. Note: Repair policy may require replacing a complete wiring harness rather than repairing individual wires. The following method is used to repair individual wires using crimp connectors.

a) Cut out the defective/damaged wire section.
b) Select a replacement wire. The wire should be of the same gauge, strand type, insulation type, and insulation color. Cut to length and strip insulation back approximately $^{3}/_{16}$ inch from ends using the wire stripper. Select shrink tubing of correct diameter (slightly larger than wire diameter) and cut to length to cover the splice connector plus a ½ inch on either side. Slide shrink tubing over wire.
c) Insert the wire into the splice connector for the correct wire gage. Crimp securely using the wire crimper tool.
d) Slide the shrink tubing over the connector and heat-shrink the tubing by using the heat gun to shrink the tubing tightly onto the connector.
e) Test the spliced repair by conducting a Voltage Drop Test.

Connections/Terminals.

a) Cut off the defective connector/terminal.
b) Select replacement connector/terminal of the same type, wire gauge and connector/terminal size.
c) Strip insulation back approximately $^{3}/_{16}$ inch. Select shrink tubing of correct diameter and cut to cover connector/terminal and add a ½ inch.
d) Slide the shrink tubing over the wire. Insert the wire into the connector/terminal. Crimp securely using the wire crimper.
e) Slide the shrink tubing over the terminal and heat-shrink the tubing by using the heat gun to shrink the tubing tightly onto the terminal.
f) Test the repair by conducting a Voltage Drop Test.

Devices.

a) Remove and replace the defective device with a known good device. Test the repair by operating the device.
b) Devices may be repairable depending on repair policy. Consult manufacturer's manuals and agency policy concerning repair procedures.

SAMPLE MAINTENANCE PRACTICE #5

BRAKES; Remove and Replace Front Brakes;
2003 STARTRANS Senator, 20-Ft.;
Ford E-350 Chassis

This sample practice was prepared in cooperation with RADAR, Unified Human Services Transportation Inc., Roanoke, VA, and is based on the Ford Chassis Maintenance Manual and the Haynes Ford Van Maintenance Manual.

Date

February 21, 2005 (Original Issue)

Web Board Disclaimer

The following disclaimer is used when this practice is posted on the TRB Maintenance Practices Web Board; remove for internal agency use:

> The information contained in the published content is provided as a service to the bus transit community, and does not constitute advice. Every attempt was made to provide quality information for the purposes outlined for this project, but we make no claims, promises, or guarantees about the accuracy, completeness, or adequacy of the content. Maintenance advice must be tailored to the specific circumstances of each agency. Because bus maintenance practices can change without notice, nothing provided herein should be used as a substitute for the advice of competent mechanics and/or maintenance crews.

Objective/Purpose

This maintenance practice provides instructions for the proper removal and replacement of front brake pads on a 2003 STARTRANS 20-foot Senator built by Supreme on a Ford E-350 chassis equipped with a Ford 7.3 L diesel engine.

Glossary of Terms

Brake disc is also called "brake rotor." It's the rotating iron "disc" that the brake pads push against on either side to stop the vehicle.
Caliper is the assembly that houses the brake pistons and pads.

Summary of Local Conditions

Buses are used in Demand Response service.
Inspection and maintenance is accomplished at a new facility that will eventually be equipped with individual mobile wheel lifts.

Parts

Brake pad and anti-rattle clip: P/N 2U2Z-2V001-AG
Pad to piston compound: CRC® - Disc Brake Quiet
Silicone Brake Caliper Grease and Dielectric Compound D7AZ-19A331-A (Motorcraft WA-10)

Special Tools Required

Welders Vice-Grip Pliers—with extended throat width
Torque Stick 140 lb-ft, MAC Tools—Wheel Torque Extension Kit

Safety Precautions and Hazardous Materials

Note: Always replace disc brake pads on both front wheels at the same time—never replace pads on only one wheel.
Always support the bus with jack stands.
The dust created by disc brake pads may be harmful to your health. Never blow it out with compressed air and don't inhale any of the dust. An OSHA-approved filtering mask should be used when working on brakes.
Also wear approved eye and hand protection.
Brake fluid contains polyglycol ethers and polyglycols. Avoid contact with eyes. Wash hands thoroughly after handling. If brake fluid contacts the eyes, flush the eyes with running water for 15 minutes. Get medical attention if irritation persists. If brake fluid is taken internally, drink water and induce vomiting. Get medical attention immediately.

Step-by-Step Procedures

Step 1 Raise the bus and support it securely on jack stands. Then remove the tire and wheel assembly using an impact wrench.

Step 2 Unclip the speed sensor wiring that is clipped to the front brake hose.

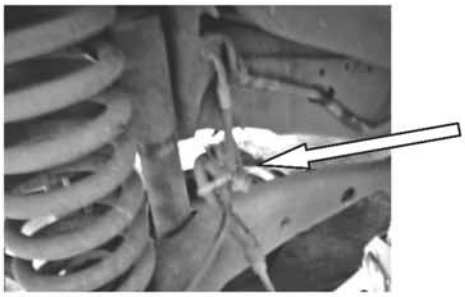

Step 3 Move the caliper piston back into the bore to provide clearance to remove the caliper from the disc. Pry the caliper away from the disc with a large screwdriver. (See figure on next page.) As the caliper is moved toward you, the disc pushes the two pistons back in their bores. As the pistons are depressed to the bottom of the caliper bore, the fluid will rise in the

master cylinder. Make sure that the fluid does not overflow. If necessary, siphon off some fluid before depressing pistons.

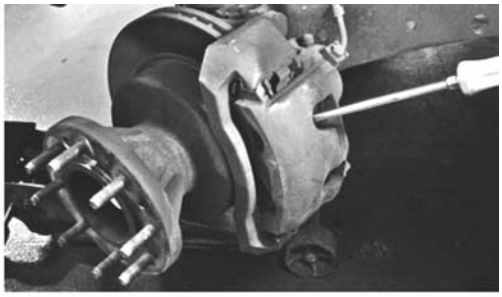

Step 4 Remove caliper mounting bolts

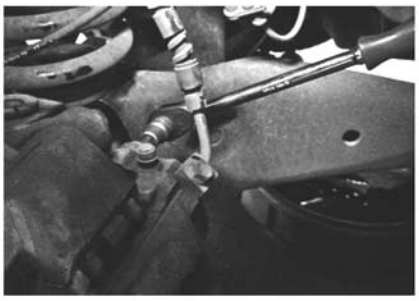

Step 5 Remove brake caliper from the disc and remove the brake pads. Inspect the caliper for torn seals and/or brake fluid leakage. If the caliper is leaking or the boots are torn, the caliper must be rebuilt or replaced.

Caution: Do not allow the disc brake caliper to hang from the front brake hose. The caliper can be supported by the wheel flange or other vehicle part. Use mechanics wire to support the caliper if needed. (See figure at right.)

Step 6 Clean the caliper and sleeve boots with a soft brush (use suitable mask and eye/hand protection). Lubricate the caliper piston sleeve boots. **Caution: To prevent deterioration of the boots, do not use petroleum-based lubricant.** Use Silicone Brake Caliper Grease and Dielectric Compound D7AZ-19A331-A (Motorcraft WA-10) or an equivalent silicone compound meeting Ford specification ESE-M1C171-A.

Step 7 Inspect brake disc carefully. Visually check the disc surface for score marks and other damage. Light scratches and shallow grooves are normal after use and may not be detrimental to brake operation, but deep score marks – over 0.015 inch – require disc removal and refinishing. Check both sides of the disc. If the disc is worn, check the disc thickness. If the disc thickness is less than 28 mm (1.1 in), replace the disc. If pulsating has been noticed during brake application, check disc for runout.

Step 8 Prepare dual pistons to be depressed back into caliper by inserting an "old" brake pad in place.

Step 9 Push the piston back into the bore to provide room for the new brake pads. To do this, place the old brake pad against the pistons and press the pistons into the caliper until they bottom out by using extended throat width Welders Vice-Grip pliers. As the piston is depressed to the bottom of the caliper bore, the fluid level in the master cylinder will rise. Make sure it doesn't overflow.

Step 10 Prepare the new brake pads by applying CRC® **Disc Brake Quiet** (red in color) to the back of the new pads before installing in the caliper bracket.

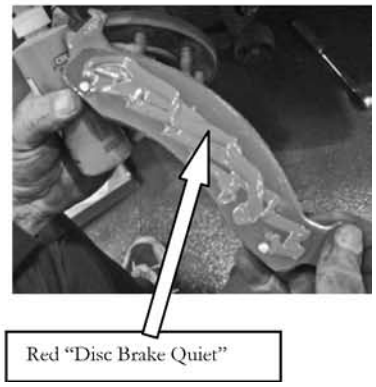

Step 11 Install the brake pads into the caliper bracket.

New brake pads installed in caliper bracket

Step 12 Place the caliper assembly onto the brake disc and install the caliper mounting bolts. Tighten the caliper bolts to 16 – 30 lb-ft.

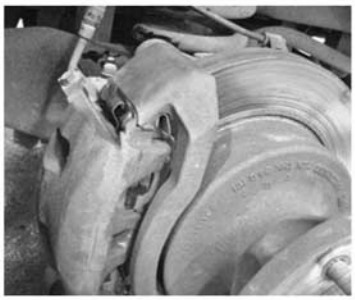

Step 13 Re-attach the speed sensor wiring.

Step 14 Firmly depress the brake pedal a few times to bring the pads into contact with the disc.

Step 15 Reinstall the wheel and torque the lug nuts using Mac Tool Torque Stick 140 lb-ft.

Step 16 Check the brake fluid level in the fluid reservoir and fill to the proper level if necessary.

Step 17 Check for fluid leakage and test drive the bus to make sure the brakes operate normally before returning the bus to service. Note: Remember to depress the brake pedal a few times to bring the pads into contact with the disc before moving the bus.

SAMPLE MAINTENANCE PRACTICE #6

Title

Body; Door Adjustment; Vapor/NFIL Slide Glide Door; 2002 New Flyer 40LF

Agency Name

This sample practice was prepared with assistance provided by the Southeastern Pennsylvania Transportation Authority (SEPTA) and is based on the Maintenance Manual provided by New Flyer Industries Ltd. for Entrance and Exit Doors.

Date

February 1, 2005 (Original Issue)

Web Board Disclaimer

The following disclaimer is used when this practice is posted on the TRB Maintenance Practices Web Board; remove for internal agency use:

> The information contained in the published content is provided as a service to the bus transit community, and does not constitute advice. Every attempt was made to provide quality information for the purposes outlined for this project, but we make no claims, promises, or guarantees about the accuracy, completeness, or adequacy of the content. Maintenance advice must be tailored to the specific circumstances of each agency. Because bus maintenance practices can change without notice, nothing provided herein should be used as a substitute for the advice of competent mechanics and/or maintenance crews.

Copyright Information

The information contained in this maintenance practice is based on illustrations and information provided by New Flyer Industries, Ltd., for Entrance and Exit Doors as contained in their Maintenance Manual, pages 16-1 to 16-10. Permission to use the copyrighted material was granted by New Flyer Industries, Ltd.

Purpose

This maintenance practice provides instructions for the proper adjustment of front or rear doors on a 2002 low-floor, New Flyer, 40-foot bus equipped with Vapor/NFIL slide glide style doors.

Glossary of Terms

- Slide Glide – door style where both door halves slide inward into the bus, also called In-Swinging Doors. In the open position, the door panels are perpendicular to the side of the bus and as close as possible to the jamb.
- Fore – forward door panel, the half closest to the front of the bus.
- Aft – rear door panel, the half closest to the rear of bus.
- psi – pounds per square inch

Summary of Local Conditions

Not Applicable

Parts

None Required

Special Tools

3-foot carpenter's square; available from Supervisor.

Safety Precautions

- Eye protection must be worn at all times when making door adjustments.
- Pressurized lines should <u>not</u> be disconnected until the pressure is safely and controllably released.
- Any malfunction or deviation of adjustment of the doors or safety systems should receive immediate corrective action.
- No bus shall be allowed to operate in transit service with the door safety systems disconnected.
- Also see specific warnings listed in the step-by-step instructions.

Hazardous Materials

Not Applicable

Step-by-Step Process—Door Adjustment Procedure

There are two parts to the door adjustment procedure. Part 1 covers adjustment of door panels and linkages, while Part 2 covers adjustment of door operating speeds.

Part 1

This section covers the adjustment of door panels and linkages.

1. Before attempting to make any adjustments, make sure that the connecting rods have been removed from the door shaft levers (see Figure 1 - Door Base Plate [Entrance]). Each panel can now be moved independently of each other. Also check that all door bracket mounting studs are centered within their respective slots, including the upper roller assembly and lower pivot assembly mounting hardware. This will establish a starting point for all door panel alignment adjustments.
2. Measure the door shaft center to the center distance at the top of the opening. If necessary, adjust the lower pivot in the forward or aft direction to obtain the same door shaft spacing at the bottom of the opening. Use the 3-foot carpenter's square to make sure that the door shafts are square with the bus floor. Tighten mounting hardware to secure the adjustment.
3. Manually close the doors. Check for approximately a $^{7}/_{8}$" gap between the door trailing edge seal and the jamb seal retainer along the entire door length. If adjustment is required, loosen the four acorn nuts securing the door to the door-mounting brackets and move the panel forward or backward as required. Tighten all mounting hardware after making adjustments.
4. With the doors in the fully closed position, ensure that the top brush forms a tight seal with the top of the doors. If gaps exist, install additional spacers between the door shaft lever and bearing to raise the door enough to form a tight seal. (See items number 4, 5, 8 and 9 of Figure 1).
5. Loosen the door top seal retainer on both door panels and adjust the height of the top rubber seal so that it overlaps the top edge of the doors by approximately $^{1}/_{16}$" when the doors are in the fully closed position. The top edge of the doors should "wipe" across the seal as they open. Tighten the retaining strip mounting hardware to secure the adjustment.
6. Adjust the door lower brush seals on both door panels by first loosening the 10–32 acorn nuts securing the brush to the lower brush holder. Move the brush down until the bristles fill the step tread grooves. Secure the adjustment by tightening all acorn nuts.
7. Manually push the doors to their full open position. Verify that the doors open to a 90° angle with respect to the step edge. If necessary, loosen the four $^{5}/_{16}$"-18 roller bracket assembly mounting screws and adjust the roller bracket to obtain a 90° door open position. Tighten screws to secure the adjustment.
8. Reattach the connecting rods to the door shaft levers using the same hardware removed earlier.

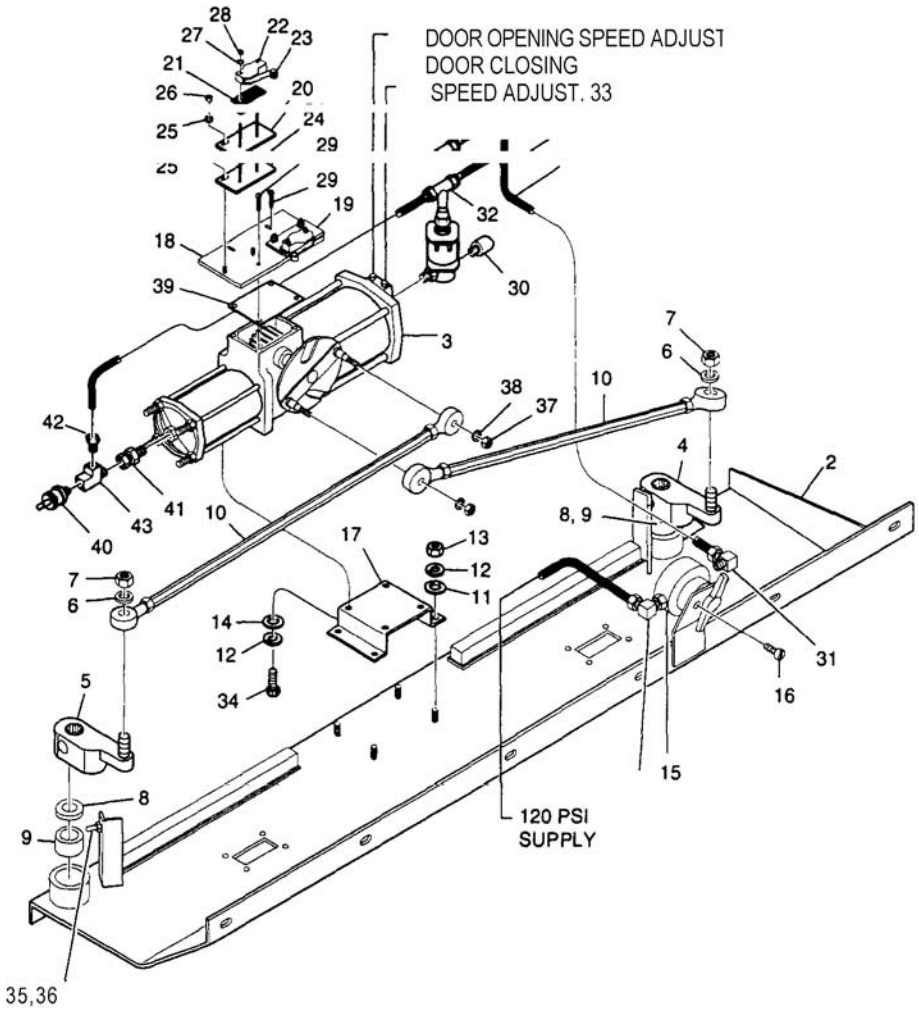

1. Base Plate Assembly, Entrance (Incl. 2...43)
2. Door Base Plate Assembly, (Welded)
3. Door Operator Assembly
4. Lever Assembly, Door Shaft RH (Incl. 6 & 7)
5. Lever Assembly, Door Shaft LH (Incl. 6 & 7)
6. Washer, Lock Special 5/16'
7. Nut, Hex 5/16"
8. Spacer, Lever
9. Bearing, Ball
10. Connecting Rod Assembly
11. Washer, Plain 3/8"
12. Washer, Lock Special 3/8'
13. Nut, Hex 3/8" - 16 UNC
14. Washer, Plain 3/8'
15. Air Cock Assembly
16. Screw, FH Slotted #8
17. Plate, Engine Mounting'
18. Switch Plate Assembly
19. Plate Assembly, Switch RH
20. Plate Assembly, Switch LH
21. Insulator, Switch
22. Switch, Snap Action
23. Lever, Switch
24. Screw, PH Slotted #8
25. Washer, Plain #8
26. Nut, Hex Keps #4 - 40 UNC
27. Washer, Plain #4
28. Nut, Hex Keps #8 - 32 UNC
29. Screw, Hex Flange Locking #8
30. Silencer
31. Elbow, Nylon Tube Fitting Brass 3/8"
32. Tee, Nylon Tube Fitting Brass 3/8'
33. Tubing, Nylon
34. Screw, Locking Torque Patch
35. Nut, Hex 5/16" - 18 UNC
36. Screw, Adjustable 5/16"
37. Nut, Hex 5/16"
38. Washer, Lock Special 5/16"
39. Cover, Housing
40. Switch, Pressure
41. Connector, Nylon Tube Fitting Brass 3/8"
42. Fitting, Pipe w/Brass Bushing 1/4"
43. Tee, Pipe Fitting Brass 1/4"

Copyright 2002 New Flyer Industries Ltd. s034120a.wmf

Figure 1: Door Base Plate (Entrance)

9. Manually open and close the doors. Verify that the leading panel overlaps the trailing panel during closing. If the edges bind during the closing, lengthen the leading panel connecting rod and shorten the trailing panel connecting rod enough to eliminate the interference.

10. Apply air to the door motor. With the doors in the closed position, verify that the leading door edge metal to metal distance is 4 ⅛" across the entire door length (see Figure 2 – Door Closure Adjustment). If adjustment is necessary, loosen the 3/16", 16-acorn nuts securing the door panel to the door-mounting brackets and move the panel forward or aft as required. Remove air from the door motor before making adjustment. Tighten mounting hardware to secure the adjustment.

11. With the doors in the closed position and air applied to the door motor, check the door-closed preload. The doors should sit firmly against the jamb seals and should not exhibit any looseness or play. To increase the door-closed preload, loosen the connecting rod jam nuts and shorten the connecting rod lengths as required. If a preload adjustment is made, recheck the door panel phasing. Refer to Step 9. Tighten connecting rod jam nuts to secure the adjustment.

12. Power open the doors and check door-open preload. In the fully open position, the doors should not exhibit any looseness or play. To increase the door-open preload, loosen the connecting rod jam nuts and lengthen the connecting rod lengths as required. If a preload adjustment is made, recheck the door panel phasing. Refer to Step 9. Tighten connecting rod jam nuts to secure the adjustment.

13. With the doors closed, turn the door shaft lever stop adjustment screws on the baseplate counter-clockwise until the heads make contact with the door shaft levers. Secure the adjustment of the stop screws by tightening the stop screw jam nuts.

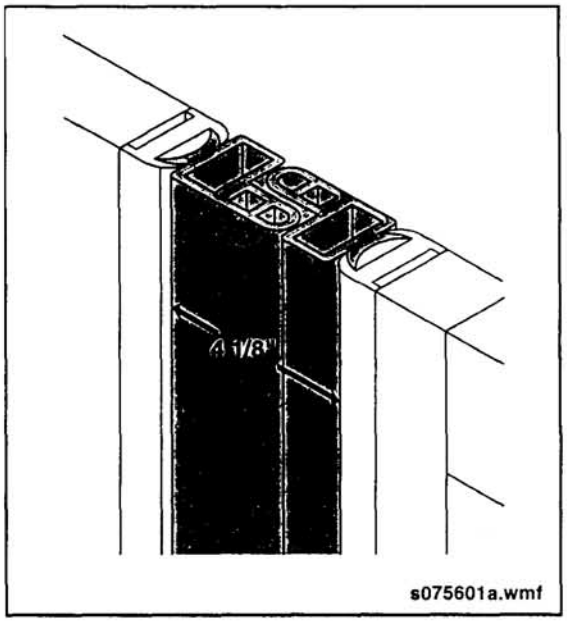

Figure 2 – Door Closure Adjustment

Copyright 2002 New Flyer Industries Ltd.

Part 2

This section covers the adjustment of door operating speeds.

NOTE: *Never force adjusting screws when adjusting them in a clockwise direction. Excessive tightening pressure (metal to metal) will damage the motor cylinder cap.*

1. Verify that all piping and wiring are properly secured and clear of all moving parts. Check to make sure that none of the wiring or piping is making contact with sharp metal surfaces or edges that may cause fraying or chafing.

NOTE: *Initially the closing speed adjustment screw is set 0.25" +/- 0.03" above the top of the lock nut, and the opening speed adjustment screw is set 0.31" +/- 0.003" above the top of the lock nut. When making adjustments <u>always</u> adjust the closing speed first since this adjustment also affects the door opening speed. When making adjustments to the speed of the door operation, ensure that the vehicle is connected to a constant source of air supply (shop air).*

2. To adjust the door closing speed:

   a) Loosen the jam nut that secures the closing speed adjusting screw (see Figure 1). Turn the screw counter-clockwise to increase the speed or clockwise to decrease the speed.

   b) While holding the adjustment screw, tighten the jam nut to secure adjustment.

WARNING: Closing speed should be adjusted to ensure 1.5 to 3.0 seconds of time between initiation of closure and full door closed position. Door closing speed must fall between 2.5 and 5.0 seconds during all pressure possibilities between 120 and 95 psi. If the door is adjusted at the highest normal pressure, the speed will decrease when lower pressure is available.

3. The door opening speed should also be between 1.5 and 3.0 seconds. To adjust the door opening speed, loosen the jam nut that secures the opening speed adjustment screw (see Figure 1). Turn the screw counter-clockwise to increase the speed or clockwise to decrease the speed. Tighten the jam nut after adjusting.

4. To adjust the cushioning during the opening cycle, loosen the jam nut that secures the door opening speed adjustment screw and turn the screw clockwise for more cushioning and counter-clockwise for less cushioning. After adjusting the cushion, tighten the jam nut and recheck the opening speed.

SAMPLE MAINTENANCE PRACTICE #7

Title of Practice

Service; Service Line Functions

Agency Name

This sample practice was prepared in cooperation with Lynx, Orlando, FL

Date

February 11, 2005

Version

Version #1 (Original Issue)

Web Board Disclaimer

The following disclaimer is used when this practice is posted on the TRB Maintenance Practices Web Board; remove for internal agency use:

> The information contained in the published content is provided as a service to the bus transit community, and does not constitute advice. Every attempt was made to provide quality information for the purposes outlined for this project, but we make no claims, promises, or guarantees about the accuracy, completeness, or adequacy of the content. Maintenance advice must be tailored to the specific circumstances of each agency. Because bus maintenance practices can change without notice, nothing provided herein should be used as a substitute for the advice of competent mechanics and/or maintenance crews.

Objective/Purpose

The objective of this maintenance practice is to define the job descriptions and duties for Service Line personnel to ensure that their activities are conducted in an orderly, thorough, and productive manner. There are seven Service Line positions:

- Driver
- Fueler
- Streetside Washer
- Curbside Washer
- Interior Cleaner
- Window Cleaner
- Detail Cleaner

Except for the Driver, Service Line personnel are allowed to exchange jobs up to two times per week.

Glossary of Terms

- A/C: air conditioning system
- Speedy dry: oil-absorbent granules used to soak up oil spots and spills
- Dry break: fuel system that allows fuel filler to be connected and disconnected without spilling fuel

Summary of Local Conditions

- The agency is absolutely committed to providing extremely clean buses to the public as a way of earning the public's respect and patronage.
- The agency policy is to remove any graffiti and gum on a daily basis.
- Bus wheels are powder-coated with brilliant white paint. The Service Line is used to keep the wheels looking freshly painted.
- Water in the region is extremely "hard," which requires the use of chemical rinsing agents and special attention to keeping windows spot free.
- Thorough cleaning is scheduled for each bus once a month.
- Buses are parked outside. Parking is extremely limited, with bus lanes only 10 feet wide. Due to the unique conditions, all buses must be backed into the lanes after daily servicing. The special driving challenges require a dedicated driver position with no other Service Line duties.
- Fareboxes are vaulted before they enter the Service Line, so this function is not part of the Service Line.

Special Tools

- Small broom
- Large broom
- Mop and bucket
- Work cart with cleaning supplies, including scraper, pine soap for mopping, graffiti remover, counter brush to clean A/C return grill, and cleaning rags.

Safety Precautions/Applicable Regulations

- All Service Line attendants are required to have a valid commercial driver's license (CDL) and must carry it with them at all times while on duty.
- Service Line attendants are provided with the following safety equipment and are urged to use them when performing their duties:
    - One box of 100 rubber gloves each month
    - Safety "bump" cap

  - Raincoat with reflective material
- Safety goggles and rubber gloves must be worn when using spray-on freezing agent to remove gum.
- Safety glasses and rubber gloves are required while checking coolant.
- Any speedy dry used to absorb large oil spots/spills must be disposed of in special containers used to store and dispose of this hazardous material.

Step-by-Step Procedures

Driver

1 Drive bus from parking area to pre-wash area of the Service Line. Note: the speed limit within the facility is 10 mph. Turn off A/C, but keep engine running. Open exit door.
2 Drive bus that has already been pre-washed to the fuel island ahead. Turn off the fast idle, place transmission in neutral, apply parking brake, and leave engine running. If the bus ahead has already been moved to the fuel island by a bus washer, go to step 3.
3 Drive a bus that has already been fueled through the bus washer; make sure windows and roof hatches are closed and turn on windshield wipers. Note: the speed limit through the bus washer is 2 mph. Report any bus washing problems immediately to the Supervisor.
4 Return the washed bus to the parking area. All buses must be backed into the parking space. Leave the bus running; make sure the transmission is in neutral and apply the parking brake. Turn on the interior lights and hazard flashers.
5 Retrieve another bus from the parking area and continue the process of moving buses through various stages of the service line and back to the parking area. Complete the bus service log and return the form to Supervisor at the end of the work shift.

Curbside Washer (Pre-Wash Area)

1 Wash the front and rear wheels and hubs with brushes and grease remover.
2 Wash the side mirror, lower body panels, and front and rear doors.
3 Rinse out the exit stepwell; be careful not to get water inside the bus.
4 Open the fuel door.
5 Go inside the bus to the driver's area and remove large debris, such as transfers, napkins, and newspapers. Move the driver's seat full forward and backward while checking for debris.
6 Lift up handicap seating and remove any debris.
7 Remove large debris from window ledges and seats.
8 Make sure that windows and hatches are closed and secured. Add garbage bags if needed. Make sure the fast idle switch is off.

Streetside Washer (Pre-Wash Area)

1 Wash the front and rear wheels and hubs with brushes and grease remover.
2 Wash the driver's window and mirror, the lower body panels, and the entire rear panel up to the muffler.
3 Wash the back end of the bus and open the rear engine bay door.
4 Assist the curbside washer with interior cleaning as needed (see steps 5-8 above).
5 If a Driver is not available, move the bus forward to the fueling area to keep the line moving. After moving the bus, place transmission in neutral, apply the parking brake, and keep the engine running.

Fueler (Fuel Island)

1 Before fueling the bus at the fuel island, wash the front end of the bus behind you in the pre-wash area.
2 For the bus that you will fuel, record the bus number, the date, and your employee number on the fueling report form.
3 Connect the fuel hose and begin to fuel.
4 Open the engine compartment door and switch on the engine compartment lights if needed.
5 Check the transmission fluid level while the engine is still running at idle speed and the transmission is in neutral. Use the "hot run" section of the dipstick to read the level, which is full when the reading is at the halfway point between "low" and "high." If reading is at the "low" mark, add 2 quarts. Do not overfill.
6 Turn the engine off and check the engine oil level. Add oil if needed according to procedures described below for each engine. Note: When adding oil, add less than you feel is necessary and check again after 15 seconds.

Series 50 Detroit Diesel:
The oil level should be at the "low" mark of the "off" area. Just below the "e" of the word "idle" indicates oil level is 4 quarts low. See picture for details.

Cummins M-11:

The oil level is full when the reading is at the bottom of the "safe" range. If the level is down to the "a" of the "add" mark, the engine is 2 quarts low. See picture for details.

Cummins ISL:

The oil level is full when the reading is at the middle of the safe area. If the reading is at the bottom of the safe area, add 2 quarts. See picture for details.

7 Check for any fluid leaks, worn or broken drive belts, loose starter motors, and other defects in the engine compartment. Report any defects on the fueling report form.
8 Check the coolant level while the engine is off. Note: safety glasses and rubber gloves are required while checking the coolant. Open the surge tank door and press in the surge tank pressure relief button until all pressure is relieved. Stand aside and open the surge tank cap

to the safety-catch position. Press in the safety catch to fully open the surge tank cap. Visually check the coolant level, and add coolant as necessary. Look for any contamination in the coolant, such as fuel and oil, by noting color. Report any defects on the fueling report form. Close the surge tank cap and make sure it locks. Ensure that the pressure relief valve is pulled out.

9 Start the engine and listen for loud pulley bearing noises or other unusual sounds. Report any defects on the fueling report form. Switch off the compartment lights if activated and close the engine door.

10 Remove the fueling nozzle and close the fuel filler door.

11 Record the fuel and any fluids added to the vehicle on the fueling report form.

12 Immediately report to the Supervisor any engine or transmission needing 4 quarts or more of oil. Also report immediately any bus that leaks fuel from the dry-break nozzle during the fueling operation.

13 Turn off the engine compartment lights and close the engine bay door.

14 At the end of the shift, clean the fuel stand, fuel hoses, and oil barrels. Use oil dry granules (speedy dry) to clean up any large oil spots or spills. When doing so, be sure to dispose of the speedy dry in the special container used to contain this hazardous waste. Clean the fuel lane driveway with the special formula spray, and hose down the fuel lanes with water.

Series 50 Detroit Diesel

Cummins M-11

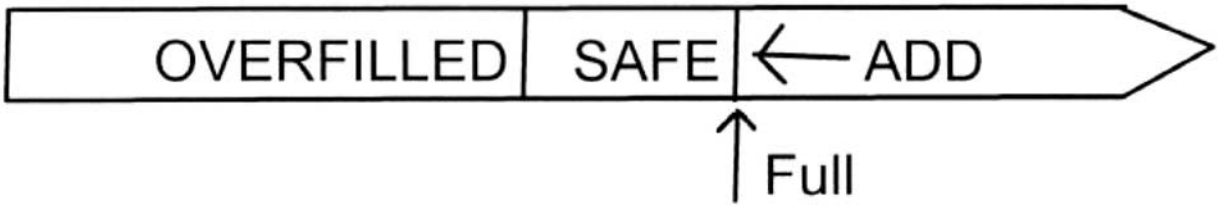

Cummins ISL

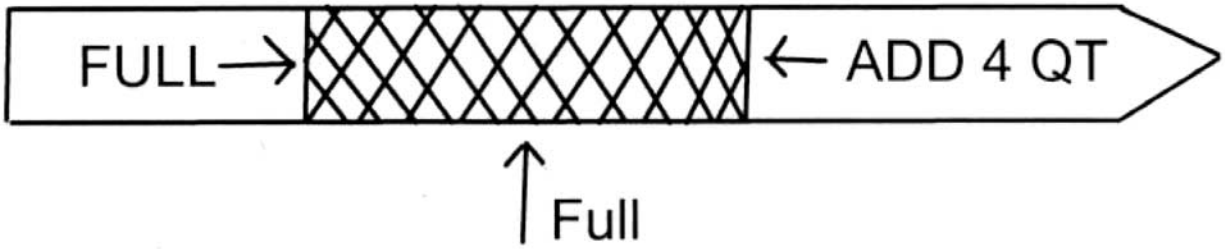

Interior Cleaner (Parking Lot Area)

1 Sweep behind the driver's seat. Remove any debris and clean under the seat.

2 Sweep the rest of the bus thoroughly, making sure to remove all debris under and between the seats. Ensure that the rear wheel wells are completely clean on each side, sweeping out any debris. Use the small broom under the seats and the large broom down the main walkway.

3 Wipe the dash, driver's gauges, and driver's sun visor.
4 Mop the bus floor thoroughly and scrub out any stains. Clean the steel runners on both sides of the floor. Mop thoroughly behind each wheel well and along the surface of the lower panel just below the seats in the very back of the bus.
5 Mop the entire driver area floor.
6 Clean and mop the flooring ledge at the rear of the entrance step well.
7 Remove any graffiti and gum.
8 After mopping 6 to 7 buses, clean the mop and change the water.
9 When the shift is over, clean the cart, return all tools, empty the trash bag, and clean and rinse the mop and mop bucket. Wet mops are stored with mop head up to facilitate drying. Fill out the "Mopped Bus List" and give it to the Supervisor.

Additional Duties: Monday, Wednesday and Friday

1 Clean window frames and panels between and above each window. Clean each interior mirror used by the driver; remember there is one located by the back door. Clean window ledges and the front wheel well area on both sides of the bus.
2 Clean handrails, TV monitors and the farebox.

Additional Duties: Tuesday and Thursday

1 Clean the entrance doors, including grab rails and stepwell lights.
2 Clean the air conditioning (A/C) return air grill, the exit stepwell corner molding, and the exit doors.

Window Cleaner (Parking Lot Area)

1 Clean all bus windows on 25 buses per work shift, including all mirrors.
2 Keep a log of buses completed on each shift.

Detail Cleaner (Parking Lot Area)

Lights and Panels

Thoroughly clean the following:

1 Light covers for the interior lights. Remove signs from the sign panel and clean both sides of the sign and panel.
2 Speaker panels, A/C return air grill, ceiling panels, roof hatches, and rear wall, including the area below rear seats.
3 Melamine panels from above the windows to the bottom of the seat edge.
4 TV monitors front and back.
5 Front and rear doors, including grab rails and modesty panels.
6 Window moldings on each window.

Driver Area

Thoroughly clean the following:

1 Top header of the front door, including the mirror above it.
2 Area just below the ceiling line to the top of the windshield, including the mirror.
3 Driver's barrier, front and back, as well as the floor area behind the driver's seat.
4 Area around the driver's pedals.
5 Entire farebox.

Seating Area

Thoroughly clean the following:

1 All seats, including backs and undersides. Remove seat cushions to clean seat bottoms and any debris caught between the seats.
2 Lower wall from the seat edge to the floor.
3 Steel runners along the edge of the floors and wall.
4 All handrails.

Floor

Thoroughly clean the following:

1 The floor, including the step area, by removing all gum and scrubbing with stiff brush. Also brush the standee line and the lines in each stepwell.
2 Front and rear wheelwells.

Note: Blue and red floors cannot be cleaned with the Formula 50® cleaner! It can only be used on cream-colored and flat floors.

Back and Front Steps

Thoroughly clean the following:

1 Stainless steel portion of each stepwell.
2 All black molding around the tops of steps.
3 Stepwell safety lights.
4 Handrails at each stair well.

Windows

1 Clean all windows inside the bus.

Clean and return all cleaning equipment at the end of the work shift.

ABBREVIATIONS AND ACRONYMS

ABS	Anti-Lock Brake System
AC	Air Conditioning
ADA	Americans with Disabilities Act
APC	Automatic Passenger Counter
APTA	American Public Transportation Association
ATA	American Trucking Association
AVL	Automatic Vehicle Location
BEMC	Bus Equipment and Maintenance Committee (of APTA)
CAA	Clean Air Act
CD	Compact Disc
CDC	Centers for Disease Control
CDL	Commercial Driver's License
CFR	Code of Federal Regulations
CNG	Compressed Natural Gas
COMPS	Catalog of Member Products and Services (available through APTA)
CTAA	Community Transportation Association of America
CWA	Clean Water Act
DC	Direct Current
DMV	Department of Motor Vehicles
DOT	Department of Transportation
DVD	Digital Video Disk
EPA	Environmental Protection Agency
FMVSS	Federal Motor Vehicle Safety Standards
FTA	Federal Transit Administration
HVAC	Heating, Ventilation and Air Conditioning
IE	Industrial Engineering
ITS	Intelligent Transportation System
MIS	Maintenance Information System
MS	Microsoft
MSDS	Materials Safety Data Sheet
MTA	Mass Transit Administration
NFPA	National Fire Protection Association
NIOSH	National Institute for Occupational Safety and Health (part of CDC)
NOAA	National Oceanic and Atmospheric Administration
NRC	National Research Council (parent of TRB)
NYCT	New York City Transit
NYCTA	New York City Transit Authority
OEM	Original Equipment Manufacturer
OSHA	Occupational Safety and Health Act
P2	Pollution Prevention Act of 1990
PC	Personal Computer
p/in	Pixels per inch
PM	Particulate Matter
PMI	Preventive Maintenance Inspection
PPE	Personal Protection Equipment
PRTC	Potomac and Rappahannock Transportation Commission
psi	Pounds Per Square Inch
RP	Recommended Practice
R&R	Remove and Replace
SAE	Society of Automotive Engineers
SEPTA	Southeastern Pennsylvania Transportation Authority
SOP	Standard Operating Procedure
SRT	Standard Repair Time
TCRP	Transit Cooperative Research Program
TMC	Truck Maintenance Council (of the ATA)
TRB	Transportation Research Board
TRIS	Transportation Research Information Services (a TRB database)
UBC	Uniform Building Code
UPS	United Parcel Service
USDOT	United States Department of Transportation
USPTO	United States Patent and Trademark Office
UST	Underground Storage Tank
VDC	Volts Direct Current
VOCs	Volatile Organic Compounds
VOM	Volt/Ohm/Milliammeter

APPENDIX A

Legal Considerations

This appendix supplements the material included in Chapter 2 of the Guidebook by detailing the legal issues present when developing maintenance practices, particularly intellectual property. The detail provided here is intended primarily for an agency's legal representative. This appendix includes how intellectual property is created and protected and how to claim your own work as intellectual property. The appendix also discusses consequences for not complying with legal requirements and provides examples of clauses and statements as a starting point for drafting your own disclaimers that can help prevent any legal troubles.

INTRODUCTION

The rights and responsibilities for sharing information are very broad and complex. This appendix should be relied upon for informational purposes only as a "springboard" for a legal discussion with the attorney representing your agency. It *cannot* take the place of a licensed and competent attorney who is familiar with the particular laws of your jurisdiction and the particular laws, rules, policies, and guidelines that govern behavior within the scope of your duties. No attorney-client relationship is created between the reader and the law firm that was consulted for this project or the firm's principals, employees, affiliates, or assigns.

The attorney responsible for your agency will ultimately know the legal issues involved with developing and sharing maintenance practices. Those issues may include:

- "Sovereign immunity," which is the privilege against lawsuits that a government or entity acting on behalf of the government (e.g., contractor or municipality) enjoys;
- Environmental regulations;
- Workplace and employee safety;
- Insurance, including workers' compensation plans and facility management;
- Issues arising from the publication and distribution of information and the control of such information;
- Issues arising from sharing information within the same industry, including anti-trust considerations; and
- The encouragement of equal participation and diversity.

As a way of presenting legal examples, the fictitious "Center City Transit Agency" ("CCTA") will be used. You will need to substitute your agency's name, city, and state as appropriate when using any clause or citation format demonstrated in this section.

DEFINING, PROTECTING, AND USING INTELLECTUAL PROPERTY

The notion of encouraging technological progress is provided for in the U.S. Constitution, which includes a section that reads in part, "The Congress shall have Power . . . to promote the progress of science and useful arts, by securing for limited times to authors and inventors the exclusive right to their respective writings and discoveries." Patent and copyright law flows from these words. Trademark law is derived from the government's responsibility to regulate commerce among the states and with foreign nations. Trade secret law arises from the right of businesses to protect their confidential information and is regulated by state law. The definitions below provide an overview of each type of intellectual property relevant to writing maintenance practices.

Patents

A patent is a right given by the federal government to exclude anyone other than the owner of the patent from making, using, or selling an invention as described and claimed in the patent. A patent must be a new, useful, and "non-obvious" invention or process. In essence, a patent is a government-granted monopoly for a fixed number of years to encourage inventors to disclose their inventions to the public. After the patent has expired (a utility patent typically expires in 17 years), the invention as described and claimed in the patent is opened to the public, at which time anyone can make, use, or sell the invention. A patent may not be renewed.

Utility patents are one type of patent that you may encounter when preparing maintenance practices. The four types of utility patents are:

- Processes,
- Machines,
- Articles of manufacture, and
- Compositions of matter.

A "process" could be a unique method for changing brake linings on a bus. A "machine" could be a new device for measuring air pressure in bus tires. An "article of manufacture" could be a new type of vehicle seat with neck support that minimizes injury in a collision, and a "composition of matter" could be a new type of antifreeze that uses different chemicals than those traditionally used.

If an invention is granted a registered patent by the United States Patent and Trademark Office (USPTO), the invention itself will normally have an inscription on its body that reads,

"U.S. Pat. Reg. No. 0000000." In some cases this information is provided on packaging or other labeling that accompanies the invention. When referring to the invention in written text, the patent holder will provide the same information either in the body of the text or in a footnote at least the first time the invention is mentioned. "Patent Pending" (also "Pat. Pend." and "patent applied for") is commonly noted on products to indicate that a patent application has been filed and is being examined by the USPTO.

If it is necessary to reference a patent held by another entity in the course of creating a maintenance practice, you are allowed to discuss, reference, explain, and compare any information within the patent. However, you cannot use the technology disclosed in the patent without first obtaining permission (called a license) from the patent owner. For instance, if the ACME Company has a patent on a unique method for measuring exhaust gas emissions of a diesel engine and you want to refer to it because it helps explain your procedure, then you may discuss the method as long as you identify that it is owned by ACME and cite the applicable patent registration number. Remember, however, you cannot use the method unless you first obtain permission from the patent holder.

If you need to refer to an invention of your own agency that has been patented, you must cite the patent registration number at a minimum the first time the invention is referred to. If your agency only has a pending application, there is no need to include the application number in the notation.

Here's a sample notation for a registered patent: "U.S. Patent Reg. No. 0000000."

Here are some sample notations for a pending patent application:

- "U.S. Patent Pending"
- "Pat. Pend."
- "Patent Applied For"

Copyrights

A copyright is a "work of authorship" that is original and fixed in a tangible medium of expression, such as in a repair manual, computer document, or DVD. Copyrights are automatically protected under the Copyright Act of 1976. There is no legal requirement to file with the U.S. Copyright Office (at the Library of Congress). The Copyright Act defines "works of authorship" as encompassing a variety of material, including, but not limited to, literary works; computer programs, including databases and operating systems; pictorial, graphic, and sculptural works; audiovisual works; sound recordings; and architectural works. Copyrights protect the manner in which an idea or information is conveyed, but not the idea or information itself. It is the creative expression of the idea or information that is covered by the Copyright Act. For example, in the case of a written maintenance procedure about how to replace brake linings, the words chosen are protected, but the information about how to replace the brake linings is not.

Rights in a copyright last the life of the owner plus 75 years. To determine whether material is formally registered with the Copyright Office, look for the notation "®" normally found within the first few pages of a work of authorship or affixed to the medium in some obvious manner, such as the "copyright page" of a book or on the label of an album. However, original works of authorship do not have to be registered with the Copyright Office to be protected because copyright law automatically protects any original material, including a maintenance practice or manual, once the material is in a fixed format. Courts are currently more restrictive about allowing for photocopying and use of copyrighted material without gaining permission. Thus, "fair use" allowances are becoming harder to prove, so do not assume that your use is automatically covered by fair use because it is noncommercial in nature.

"Cutting and pasting" information into your own document without citing its source is a direct violation of the Copyright Act. One should never cut and paste material protected by copyright without giving full credit to the owners by citing the source and, if appropriate, by using text-editing devices, such as indentions and quotation marks, to show ownership by another. Even paraphrasing information can be problematic without proper attribution. If the idea from the original source remains the same in the paraphrased version, then the original source must be cited. Distribution of material that has violated the Copyright Act is also illegal and can carry monetary damages if proven in a court of law.

Your agency's attorney can offer further advice on whether certain material is protected or falls under the fair use exception for your purposes. As a side note, there still remains a dispute about whether all governmental use of copyrighted material qualifies as fair use. The consensus appears to be that government agencies, just like private entities, must properly cite material and sometimes must also obtain permission before using material.

While it is not required to designate your work of authorship as proprietary information to claim protection, affixing a notation that includes the following can dissuade improper use: the Copyright Notice ("©"), the year of publication (not year of inception), the name of the copyright owner (not necessarily the author), and contact information if desired. Affixing the statement, "All rights reserved" to your work of authorship notifies users that all available rights are claimed.

When you create an original maintenance practice and save it on your computer, the procedure in this fixed form is automatically protected by copyright law. You do not need to file an application with the Copyright Office in order to enjoy the protections of a copyright or to prevent others from claiming creative ownership over the work, copying the work, or distributing the work. However, filing an application with the Copyright Office must be done before initiating a lawsuit for

infringement in federal court. In some cases, as the copyright holder, you may choose to waive your copyright protections either in part or in whole. Format examples are provided below.

Here is a copyright format example: "©2004 Center City Transit Agency, Center City, ST. All rights reserved."

The following could be added as a footnote or within an agreement:

> All rights reserved. The author(s) (unless otherwise indicated) either own the intellectual property rights in the content that is made available or has obtained the permission of the owner of the intellectual property to use such content.

The following could be added to limit usage of copyrighted work:

- No use of this copyrighted material other than for the purposes of this project is permitted without the express written permission of the author(s).
- With the exception of properly cited sources presented herein, this maintenance practice is copyright protected under the copyright laws of the United States and are the exclusive property of Center City Transit Agency. Incorporating any part of the maintenance practice into another form is not permitted without prior written consent of Center City. Except for personal, noncommercial use, the reproduction, copying, publication or distribution of all or any part of this document, in any medium, printed or electronic, is forbidden without the express written permission of Center City.

Consult with the attorney representing your agency to determine the appropriateness of including copyright protection material in practices developed for agency use or those posted on the Web Board.

Trademarks

The U.S. Patent and Trademark Office defines a trademark as "a word, phrase, symbol or design, or a combination of words, phrases, symbols or designs that identifies and distinguishes the source of the goods of one party from those of others." Having a legitimate intention to use a trademark in commerce also qualifies for some protection under the Trademark Act. In some cases, trademark owners who provide only services use the specific term "service mark" rather than the general term "trademark," but there is no legal distinction between the two; thus, service marks receive the same protection as other trademarks. Trademark registrations can be renewed indefinitely and may last forever, as long as the trademark is continually used in commerce to identify the specified goods or services.

If you wish to use the trademarks of others in describing a bus maintenance procedure, you may want to indicate that the marks are the property of another. For example, if, in the process of explaining your procedure, you state that the engine being worked on is manufactured by the ACME Company, you can identify the term "ACME Company" by placing "®" following the trademark, such as "ACME Company®".

Transit agencies, like other entities, may have the need to create and protect their own trademarks. The most common reason to own and protect trademarks is for the advertising and marketing material used for promoting ridership. Other reasons can include the publication of manuals, conference materials, or other written documents for distribution or sale, but can also include promotional items such as T-shirts. Another example may include a transit agency that wants to protect a slogan regarding the safety of their buses based on superior maintenance practices, such as the slogan, "Our Maintenance Team is Your Safety Team."

If your agency owns trademarks, regardless of whether they are registered, you should identify the words or slogans as trademarks because you gain some rights by doing so. You can identify trademarks by using "®" for registered trademarks, "™" for unregistered trademarks, or "℠" for unregistered service marks (i.e., unregistered trademarks for services). The owner's name ("Center City Transit") and contact information can be added in a footnote if desired.

The following may be used in different situations, such as in a footnote, in an agreement, in the credits pages of a maintenance practice, or in a pop-up window on a website:

> The trademarks, "_____," "_____," and "_____" are the intellectual property of Center City Transit Agency, Center City, ST. No use of these marks and any other marks owned may be used without express written consent. Any unauthorized commercial use will be deemed an infringement under applicable trademark laws. Center City Transit Agency reserves the right to prosecute unlawful infringement and use of its intellectual property to the full extent allowed of the law.

The following additional information can also be added:

> "®", "™", and "℠" indicate ownership in a registered or pending trademark or service mark by Center City unless otherwise noted.

Trade Secrets

A trade secret is protected under state law. The Uniform Trade Secrets Act, enacted in several states, defines trade secrets as "information, including a formula, pattern, compilation, program, device, method, technique, or process that derives independent economic value from not being generally known and not being readily ascertainable and is subject to reasonable efforts to maintain secrecy."

A trade secret protects valuable, nonpublic information, such as all forms and types of financial, business, scientific, technical, economic, or engineering information, including methods, techniques, processes, procedures, programs, or

codes, whether tangible or intangible, regardless of how the information is stored, compiled, or memorialized. Two of the most famous trade secrets are the Coca Cola formula (believed to be known by only two living individuals) and the mixture of spices used in Kentucky Fried Chicken's "original recipe" chicken.

There is no particular way to notify the public whether a trade secret exists or not; therefore, you are not liable if you independently discover or even knowingly "reverse engineer" a trade secret of another. For example, conducting a chemical analysis of the mixture of spices used by Kentucky Fried Chicken for your own use does not violate trade secret laws. However, if you steal the recipe, then you are liable and can be prosecuted under the law.

A trade secret can be established without filing an application with a government body or giving public notice as is required for trademarks and patents. The only requirement is that the subject matter of the trade secret be confidentially developed, provide some sort of economic advantage, and be kept a secret. A trade secret lasts indefinitely if secrecy is properly maintained.

The responsibility to maintain a trade secret can entail signing a confidentiality agreement and following guidelines to protect the secret. If you have developed information that you believe should be protected by trade secret laws, you need to work closely with your agency's attorney to develop guidelines and procedures that will maintain the level of secrecy necessary.

There is no format for notifying third parties that a trade secret exists because maintaining secrecy over the information is the advantage. The moment you disclose a trade secret to someone who has not signed a confidentially agreement or who is not under obligation to keep the information confidential, you lose trade secret rights. Normally, if you have access to a trade secret owned by your agency, you know it. However, if you have any concerns, contact your agency's attorney before publishing information that you think might be secret. Remember, once information is published, it is no longer a trade secret.

CONSEQUENCES OF NOT PROTECTING INTELLECTUAL PROPERTY

Responsibility

Protecting the integrity of intellectual property and its sources is a vital part of our economy. The U.S. Constitution clearly sets out provisions for the protection of original works and inventions. When it comes to using reference material when developing practices, you are responsible for maintaining the integrity of the intellectual property of another. Simply put, *it is unlawful to present a creative endeavor (patent, trademark, or copyright) of another as your own.*

Consequences of Misusing Intellectual Property

The consequences for misusing the intellectual property of others can vary and may depend on whether the misuser had knowledge of what they were doing.

If you make, use, sell, or offer to sell the patented invention of another (called infringement), the consequences may be severe. If a patent owner believes there is infringement, typically the owner "stakes their claim of right" by sending a warning letter to the party making the infringement. The warning letter may include a copy of the patent itself for clarification. Sometimes the warning letter will contain an offer to the party receiving the letter for purchasing a license to the technology for a fee. Accepting the license offer and paying the fee allows for continued use under the guidelines set forth by the owner of the patent.

If a license is not offered, however, and you continue to use the patent, the patent owner can sue in federal court to require you to stop using the patent and to pay damages for using it. There is a general trend toward large damage awards in cases of patent infringement. Similarly, if you violate someone's copyright, the copyright owner can sue you in federal court. However, in the case of copyright, there is a legal distinction between knowingly and unknowingly violating a copyright, and this distinction can affect the amount of damages. There is an increasing trend toward strict interpretation of the Copyright Act, which can increase damages for aggrieved parties.

If you use someone else's trademark without their permission, or "infringe" their trademark, you will typically receive a letter demanding that you cease using the trademark. This letter is called a "cease and desist" letter. If you continue to use the trademark, the trademark owner can sue you in court requesting that the court issue an order requiring you to stop using the trademark. The aggrieved party can ask the court for monetary damages and attorney's fees. If the trademark owner can prove that you knowingly used their trademark and continued to do so after you were warned, the trademark owner can ask the court to triple the damages award.

Since trade secrets are governed by state law, each state can set out different penalties for stealing someone else's trade secret. In most states, the trade secret owner can take you to court and ask for monetary damages, including attorney's fees. Furthermore, those who steal a trade secret are now subject to federal criminal statutes. An amendment to the Uniform Trade Secrets Act made in 1996 gave additional protection against anyone who steals a trade secret.

EXAMPLES AND CLAUSES

You may use the following examples and clauses in your own maintenance practices. However, be aware that some items may not apply to your particular situation and all references to CCTA or Center City Transit Agency are used as examples only.

Requesting Permission to Use Resources

The following sample letter can be used to request permission to use the intellectual property of another:

> To-Whom-It-May-Concern:
>
> I am the maintenance supervisor for the Center City Transit Agency. We have an exclusive contract with you, "Bus Manufacturer," for the buses we buy for our city. We are now involved in a project sponsored by the Transportation Research Board (TRB) regarding the sharing of our bus maintenance procedures with other agencies.
>
> The reason behind the project is an effort to improve the efficiency and effectiveness of our maintenance program, as well as the programs of other agencies. We are requesting from you, "Bus Manufacturer," a limited, royalty-free license to use portions of the maintenance manual entitled "TITLE" in order to fully explain our bus maintenance procedures.
>
> If we do not hear back from you within 30 days of the date of this letter, we will presume there is no problem in using portions of the publication, "TITLE." We intend to give full credit to the publishers or editors of the publication and have no intention whatsoever of misusing the work. CCTA will not intentionally infringe upon your established rights of copyright or trademark.

Disclaimers and Limiting General Liability

Disclaimers are used when sharing information to forewarn users that the agency providing the information is not liable for the information or any consequences that may follow from the use of the information. For example, imagine that you develop and share a maintenance procedure for changing the brake linings on a particular model of bus. If another agency uses your procedure, you do not want to be held liable for any problems resulting from their usage. Litigation to determine who is at fault can be very time consuming and expensive. Issues that could arise include whether your procedure was faulty or whether the user's incorporation of the procedure was faulty.

The maintenance procedure is presumed to be for informational purposes only. Therefore, it is critical to notify users that the procedure you are sharing is to be followed at the users' own risk of injury or liability. The following examples are provided to illustrate the types of common clauses placed along with published information to limit liability to the author(s).

Here is a sample disclaimer of endorsement:

> Any reference obtained in the published content does not constitute or imply an endorsement by the author(s) of products, processes, services, businesses, organizations, associations, or other entities. The views and opinions expressed in any referenced document do not necessarily state or reflect those of CCTA.

Here are three sample general disclaimers:

> The information contained in the published content is provided as a service to the bus transit community, and does not constitute advice. Every attempt was made to provide quality information for the purposes outlined for this project, but we make no claims, promises, or guarantees about the accuracy, completeness, or adequacy of the content. Maintenance advice must be tailored to the specific circumstances of each agency. Because bus maintenance practices can change without notice, nothing provided herein should be used as a substitute for the advice of competent mechanics and/or maintenance crews.
>
> The author(s) make no warranties, express or implied, including warranties of merchantability and fitness for a particular purpose and assume no legal liability for the accuracy, completeness, or usefulness of any information published for the purposes stated herein.
>
> The author(s) make no representations about the accuracy, completeness, or suitability of the information contained in the content published. All such information is provided "as is" without warranty of any kind. The author(s) hereby disclaim all warranties and conditions with regard to this information, including all implied warranties and conditions of merchantability, fitness for a particular purpose, title, and noninfringement. In no event shall the author(s) be liable for any special, direct, indirect, consequential or incidental damages, or damages whatsoever resulting from loss of use, data, or profits whether in action of contract, negligence, or other tortuous action arising out of or in connection with the published content. Users who follow the steps in the published maintenance practice do so at their own discretion and risk.

Here is a sample disclaimer for indemnity:

> You agree to indemnify and hold "Center City Transit" and its representatives, affiliates, officers, agents, co-branders, other partners, and employees harmless from any claim or demand, including reasonable attorney's fees, made by any third party due to or arising out of content submitted, posted, transmitted, or made available through this project, your use of electronic forms of transmission of the content, or your violation of any rights of another.
>
> You expressly understand and agree that the author(s) shall not be liable to users of the content for any direct, indirect, incidental, special, consequential, or exemplary damages, including but not limited to damages for loss of profits, goodwill, use, data, or other intangible losses resulting from (i) the use or the inability to use the maintenance practices as published, (ii) the cost of following the maintenance practices as published, and (iii) any other matter relating to the published content.

Blanket Licenses

If you would like to allow your peers permission to use the contents of your maintenance practice without contacting you or paying for a license, you can issue a "blanket license." Blanket licenses normally cover a certain group of users for particular uses and are an efficient means to allow properly controlled usage of intellectual property. Blanket licenses do not allow for the acquisition of intellectual property as one's own, but rather can establish a royalty-free (i.e., payment-free) arrangement to more than one entity or individual. Basically, a blanket license tells the reader that the information is intellectual property and that they can use it in a limited manner. In most cases, this means to give credit for

the origin of the information and to refrain from altering the material, including trademarks, in any way.

Here's a sample blanket license:

> Center City grants limited and revocable permission to use, copy, and distribute information and materials, including copyrights and trademarks referenced within this maintenance procedure, provided that (1) the appropriate trademark registration symbol or copyright symbol appears where applicable; (2) after the first mention of such intellectual property, a footnote or other text formatting is used to tell the reader who the source and owner of said intellectual property is; (3) usage is for informational and noncommercial purposes only and related to participation in this project only; and, (4) no modification occurs to the protected material by the user.

APPENDIX B

MS Word Template Instructions

This appendix includes instructions for using the MS Word template. Appendix C includes a copy of the template itself. To be functional, an electronic version of this template will have to be downloaded from TRB's Maintenance Practices Web Board over the Internet as described in Chapter 2, Part 2. In addition, both files will need to be saved separately *into the same directory* on your computer hard drive.

INTRODUCTION

The template allows you to simplify the process of composing a maintenance practice by standardizing the structure and text style. The template was developed as a Word document and requires an understanding of that word processing program to use. The template follows the format presented in Chapter 4 of the hard-copy Guidebook. By using the template, you will be able to focus on the content of your practice instead of being concerned with formatting it.

If you need help while developing a practice, the template contains links to relevant sections of the Guidebook. The first set of links will take you to instructions for completing individual practice sections (creating a practice title, summarizing local conditions, etc.). The second set of links will take you to specific sections of the Guidebook to obtain more general guidance (information on writing well, inserting pictures, obtaining reference material, regulatory compliance, etc.).

INSTRUCTIONS FOR USING THE TEMPLATE

Downloading the Template

The template file can be downloaded from the Maintenance Practices Web Board as described in Chapter 2, Part 2, "Using the Web Board."

Installing the Template File on Your Computer

For the links contained in the template to function, *the template and Guidebook must be saved as two separate files into the same directory* on your computer hard drive. Note that the template is an MS Word file, while the Guidebook is an Adobe PDF file.

Using the Template to Write a Maintenance Practice

When you're ready to write a maintenance practice, open the template file. If you try exiting the file at any time, the program will ask you to give that file a new name, thereby preserving the original (blank) template for future use when developing other practices. You can always download another blank template from the Web Board if needed.

The template contains numerous gray-shaded areas. These shaded areas are form fields where you can enter new text. Click once on the shaded box and start typing; a standard font style and size has already been applied to these form fields. Existing instructions contained in the shaded areas will disappear as you type in new text. Note: You may have to delete any instructional text that remains in the shaded areas.

Page Numbering and Footers

Page numbering occurs automatically; it has been included in the template's footer. It is recommended that you also add the practice title to the footer. To do so, or to change or delete the page numbering,

1. Click "View" from the toolbar, then "Header and Footer."
2. A window box appears. Select the footer by clicking on the icon that looks like a page with a rectangular box above and below the page. This switches between header and footer. (Note: different versions of Word may have different features.)
3. With the cursor in the footer box, type in the practice title.
4. You can also change or delete the page numbering while the header/footer box is still open.
5. Click on "Close" when finished and you'll be taken back to your document. You can always go back into the footer to make additional changes by following the steps described above.

Section Headings

Since use of the practice format is voluntary, you may want to delete some section headings and add new ones. To do so, you can add text, delete text, or bold text as you would any Word document.

Using the Step-by-Step Procedures Section

The step-by-step procedures section of the template format may have more or fewer blank steps (i.e., rows) than you actually need to complete your particular practice. Adding and deleting rows is done from the "Table" menu.

To add new step rows,

1. Position your cursor to the left of the letter "S" of the word "Step" in an existing row that's above or below where you want the new row to appear.
2. Click on the "Table" toolbar, then "Insert." From there click on "Rows Above" or "Rows Below" depending on where you want the new step added. A new row will be inserted as commanded.
3. Repeat the insertion step for as many rows as needed.

To delete unneeded step rows,

1. Position your cursor to the left of the letter "S" of the word "Step" in an existing row that you want deleted.
2. Click on the "Table" toolbar, then "Delete." From there, click on "Rows." The row will be deleted.
3. Repeat the deletion step for as many rows as needed.

Pictures

A cell is provided to the far right of each step for inserting a picture or graphic if needed. Refer to Chapter 3 of the Guidebook for instructions on how to insert a picture into a Word document. If a picture is not used in the cell provided, the text "[Insert image of step, as needed]" will need to be manually deleted from that box before printing.

If you are *not* using pictures for a given step, you can merge the empty picture cell of the table with the text cell, which will make the text extend all the way to the right margin. To do so, use your cursor to highlight both cells (place cursor in left cell, click, hold, and drag to right cell until both cells are highlighted). Then go to the **"Table"** toolbar and click on **"Merge Cells."** The two cells will now become one. (Sample Practice #5 was developed with separate cells for pictures located to the right of each step, while Sample Practice #7 was developed by merging the two cells because pictures were not used.)

Template Links

As mentioned above, the template contains links to sections of the Guidebook to assist you with the practice. Click on an underlined link and the appropriate reference text will open in a new window. You can switch back and forth between the two programs by clicking on the "Word" or "Adobe" icons found at the bottom of your screen"Window" tool bar. Remember, for the links contained in the template to function, *the template and Guidebook must be saved as two separate files into the same directory* on your computer hard drive. Since the Guidebook is in Adobe PDF format, you can reference any of the Guidebook sections, but, depending on your Adobe version, you may not be able to "cut and paste" material from those sections. A free download of the latest version of Adobe Reader, which will allow you to cut and paste material from the Guidebook, is available at www.adobe.com. Click on "Help," "Adobe Reader Help," and then "Editing Adobe PDF Documents" for instructions on how to cut and paste material.

Printing the Final Maintenance Practice

Before printing the final maintenance practice, you will need to delete the box of "Links to Instructions" on page one of the template. To do so:

1. Move your mouse over a corner of the box until the cursor turns into a four-pointed arrow.
2. Click once with the four-pointed arrow to select the whole box. (See the box on this page that has been selected; the border is highlighted and there are small black squares at the corners.)
3. Click "Delete," and the box and its contents will disappear.

APPENDIX C

MS Word Template

Title of Practice
Topic (e.g., Electrical): Task Description
(e.g., Repair and Replace)
Component Application, If Applicable
Bus Application, If Applicable

Agency Name

Enter Agency Name
Enter Address
Enter Phone, Fax

Links to Instructions for Using This Template
(delete this box before printing)

Title of Practice
- Legal Disclaimer
- Copyright Information
- Objective/Purpose
- Glossary of Terms
- Summary of Local Conditions
- Parts
- Time Standard
- Special Tools
- Safety Precautions/ Applicable Regulations
- Hazardous Materials
- Step-by-Step Procedures

Links to Guidebook

- Entire Guidebook
- Legal Considerations
- Using the Web Board
- Obtaining Reference Material
- Prioritizing Reference Material
- Tailoring Practices to Local Conditions
- Developing Time Standards
- Integrating Practices with Training
- Regulatory Compliance
- Writing Effectively
- Using Photos/Graphics
- Developing Practices
- Step-by-Step Instructions

Date

Enter date this practice was most recently issued.

Version

Enter version number here and, if applicable, date of superseded version.

Legal Disclaimer

Enter legal disclaimer here as applicable.

Copyright

Enter copyright information here as appropriate.

Objective/Purpose

State the purpose of the maintenance practice in concise terms by answering: what are you trying to achieve with this practice?

Glossary of Terms

Identify and define any unique terms.

Summary of Local Conditions

Summarize local climatic, operating (e.g., duty cycle) and shop conditions affecting specific portions of this practice.

Parts

List all parts (individual and kits) needed to complete this practice and the total cost of those parts.

Time Standard

Specify how much labor time is required to perform all the tasks in this practice.

Special Tools

List all special tools needed for performing the tasks.

Safety Precautions/Applicable Regulations

List safety precautions and regulations that must be followed when performing the tasks.

Hazardous Materials

List any hazardous materials generated from performing the tasks and proper disposal methods.

Step-by-Step Procedures

Step No.	Description of the step.	[Insert image of step, as needed]
Step No.	Description of the step.	[Insert image of step, as needed]
Step No.	Description of the step.	[Insert image of step, as needed]
Step No.	Description of the step.	[Insert image of step, as needed]
Step No.	Description of the step.	[Insert image of step, as needed]
Step No.	Description of the step.	[Insert image of step, as needed]

Abbreviations used without definitions in TRB publications:

AASHO	American Association of State Highway Officials
AASHTO	American Association of State Highway and Transportation Officials
ADA	Americans with Disabilities Act
APTA	American Public Transportation Association
ASCE	American Society of Civil Engineers
ASME	American Society of Mechanical Engineers
ASTM	American Society for Testing and Materials
ATA	American Trucking Associations
CTAA	Community Transportation Association of America
CTBSSP	Commercial Truck and Bus Safety Synthesis Program
DHS	Department of Homeland Security
DOE	Department of Energy
EPA	Environmental Protection Agency
FAA	Federal Aviation Administration
FHWA	Federal Highway Administration
FMCSA	Federal Motor Carrier Safety Administration
FRA	Federal Railroad Administration
FTA	Federal Transit Administration
IEEE	Institute of Electrical and Electronics Engineers
ISTEA	Intermodal Surface Transportation Efficiency Act of 1991
ITE	Institute of Transportation Engineers
NASA	National Aeronautics and Space Administration
NCHRP	National Cooperative Highway Research Program
NCTRP	National Cooperative Transit Research and Development Program
NHTSA	National Highway Traffic Safety Administration
NTSB	National Transportation Safety Board
SAE	Society of Automotive Engineers
SAFETEA-LU	Safe, Accountable, Flexible, Efficient Transportation Equity Act: A Legacy for Users
TCRP	Transit Cooperative Research Program
TEA-21	Transportation Equity Act for the 21st Century
TRB	Transportation Research Board
TSA	Transportation Security Administration
U.S.DOT	United States Department of Transportation